DocuSign Envelope ID: A255E605-24D7-4CFB-B5B8-92120EC542FC

PROJECT REFERENCE NO.	SHEET NO.
R-5725	Sig-3.1

18 CHANNEL CONFLICT MONITOR PROGRAMMING DETAIL

(remove jumpers and set switches as shown)

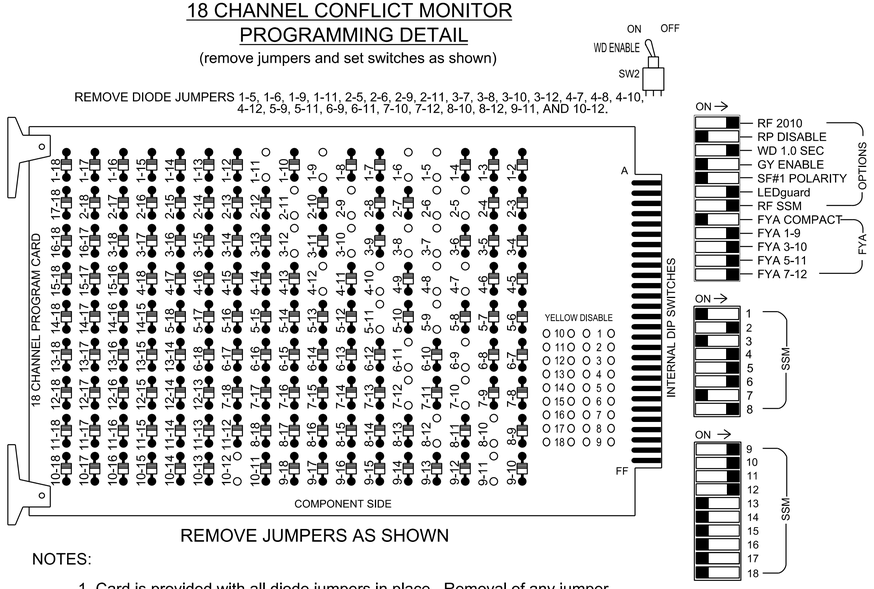

REMOVE JUMPERS AS SHOWN

NOTES:

1. Card is provided with all diode jumpers in place. Removal of any jumper allows its channels to run concurrently.
2. Ensure jumpers SEL2-SEL5 and SEL9 are present on the monitor board.
3. Ensure that the Red Enable is active at all times during normal operation.
4. Connect serial cable from conflict monitor to comm. port 1 of 2070 controller. Ensure conflict monitor communicates with 2070.

NOTES

1. To prevent "flash-conflict" problems, insert red flash program blocks for all unused vehicle load switches in the output file. The installer shall verify that signal heads flash in accordance with the signal plan.
2. Program phases 4 and 8 for Dual Entry.
3. Program controller to start up in phase 2 Green No Walk and 6 Green No Walk.
4. If this signal will be managed by an ATMS software, enable controller and detector logging for all detectors used at this location.

EQUIPMENT INFORMATION

Controller.....2070LX
Cabinet.....332 w/ Aux
Software.....Q-Free MAXTIME
Cabinet Mount.....Base
Output File Positions.....18 With Aux. Output File
Load Switches Used.....S1, S2, S4, S5, S7, S8, S10, S11, AUX S1, AUX S2, AUX S4, AUX S5
Phases Used.....1, 2, 3, 4, 5, 6, 7, 8
Overlap "1".....*
Overlap "2".....*
Overlap "3".....*
Overlap "4".....*

*See overlap programming detail on this sheet

SPECIAL DETECTOR NOTE

Install a video detection system for vehicle detection.
Perform installation according to manufacturer's directions and NCDOT engineer-approved mounting locations to accomplish the detection schemes shown on the Signal Design Plans.

SIGNAL HEAD HOOK-UP CHART

LOAD SWITCH NO.	S1	S2	S3	S4	S5	S6	S7		S8	S9	S10	S11	S12	AUX S1	AUX S2	AUX S3	AUX S4	AUX S5	AUX S6
CMU CHANNEL NO.	1	2	13	3	4	14	5		6	15	7	8	16	9	10	17	11	12	18
PHASE	1	2	2 PED	3	4	4 PED	5		6	6 PED	7	8	8 PED	OL1	OL2	SPARE	OL3	OL4	SPARE
SIGNAL HEAD NO.	11★	21,22	NU	31★	41,42	NU	51★	42	61,62	NU	71★	81,82	NU	11★	31★	NU	51★	71★	NU
RED		128			101		*		134			107							
YELLOW	*	129		*	102				135		*	108							
GREEN		130			103				136			109							
RED ARROW														A121	A124		A114	A101	
YELLOW ARROW								132						A122	A125		A115	A102	
FLASHING YELLOW ARROW														A123	A126		A116	A103	
GREEN ARROW	127			118			133	133			124								

NU = Not Used
*Denotes install load resistor. See load resistor installation detail this sheet.
★See pictorial of head wiring in detail this sheet.

FYA SIGNAL WIRING DETAIL

(wire signal heads as shown)

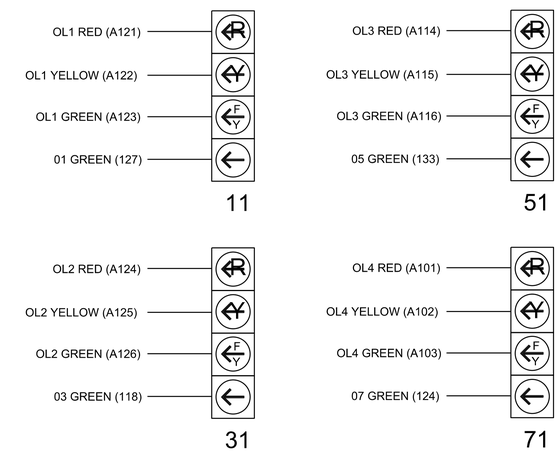

INPUT FILE POSITION LAYOUT

(front view)

		1	2	3	4	5	6	7	8	9	1O	11	12	13	14
FILE "I"	U	SLOT EMPTY	SLOT EMPTY	SLOT EMPTY	SLOT EMPTY	SLOT EMPTY	SLOT EMPTY	SLOT EMPTY	SLOT EMPTY	SLOT EMPTY	SLOT EMPTY	SLOT EMPTY	SLOT EMPTY	SLOT EMPTY	FS DC ISOLATOR
	L														ST DC ISOLATOR
FILE "J"	U	SLOT EMPTY	SLOT EMPTY	SLOT EMPTY	SLOT EMPTY	SLOT EMPTY	SLOT EMPTY	SLOT EMPTY	SLOT EMPTY	SLOT EMPTY	SLOT EMPTY	SLOT EMPTY	SLOT EMPTY	SLOT EMPTY	SLOT EMPTY
	L														

EX.: 1A, 2A, ETC. = LOOP NO.'S

FS = FLASH SENSE
ST = STOP TIME

FLASHER CIRCUIT MODIFICATION DETAIL

IN ORDER TO INSURE THAT SIGNALS FLASH CONCURRENTLY ON THE SAME APPROACH, MAKE THE FOLLOWING FLASHER CIRCUIT CHANGES:

1. ON REAR OF PDA - REMOVE WIRE FROM TERM. T2-4 AND TERMINATE ON T2-2.
2. ON REAR OF PDA - REMOVE WIRE FROM TERM. T2-5 AND TERMINATE ON T2-3.
3. REMOVE FLASHER UNIT 2.

THE CHANGES LISTED ABOVE TIES ALL PHASES AND OVERLAPS TO FLASHER UNIT 1.

LOAD RESISTOR INSTALLATION DETAIL

(install resistors as shown)

ACCEPTABLE VALUES	
Value (ohms)	Wattage
1.5K - 1.9K	25W (min)
2.0K - 3.0K	10W (min)

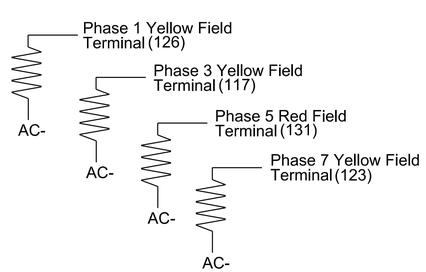

OVERLAP PROGRAMMING

Front Panel
Main Menu >Controller >Overlap >Overlap Parameters/Overlap Timings

Web Interface
Home >Controller >Overlap Configuration >Overlaps

Overlap Plan 1

Overlap	1	2	3	4
Type	FYA 4 - Section	FYA 4 - Section	FYA 4 - Section	FYA 4 - Section
Included Phases	2	4	6	8
Modifier Phases	1	3	5	7
Trail Green	0	0	0	0
Trail Yellow	0.0	0.0	0.0	0.0
Trail Red	0.0	0.0	0.0	0.0

THIS ELECTRICAL DETAIL IS FOR
THE SIGNAL DESIGN: 07-0883T2
DESIGNED: Apr 2023
SEALED: 04/05/2023
REVISED: N/A

Electrical Detail
(Temporary Design 2 - TMP Phase 1, Step 4)

DOCUMENT NOT CONSIDERED FINAL UNLESS ALL SIGNATURES COMPLETED

ELECTRICAL AND PROGRAMMING DETAILS FOR:

NC 68
at
NC 150 (Oak Ridge Road)

Division 7 Guilford County Oak Ridge

PLAN DATE: April 2023 REVIEWED BY: TS Popelka
PREPARED BY: JA Wendt RKA PROJ. NO.: 18062 (040)

REVISIONS	INIT.	DATE

SIGNATURE: Timothy Popelka
DATE: 04/05/2023
SIG. INVENTORY NO. 07-0883T2

SEAL
NORTH CAROLINA PROFESSIONAL SEAL 051573 ENGINEER TIMOTHY S. POPELKA

Infrastructure Consulting Services, Inc.
RKA
RAMEY KEMP ASSOCIATES
5808 Faringdon Place
Raleigh, North Carolina 27609
Phone: 919-872-5115
NC License No. F-1489
www.rameykemp.com

750 N.Greenfield Pkwy,Garner,NC 27529