DocuSign Envelope ID: 3B662C47-BB36-47FC-A7EE-E83AFC878B49

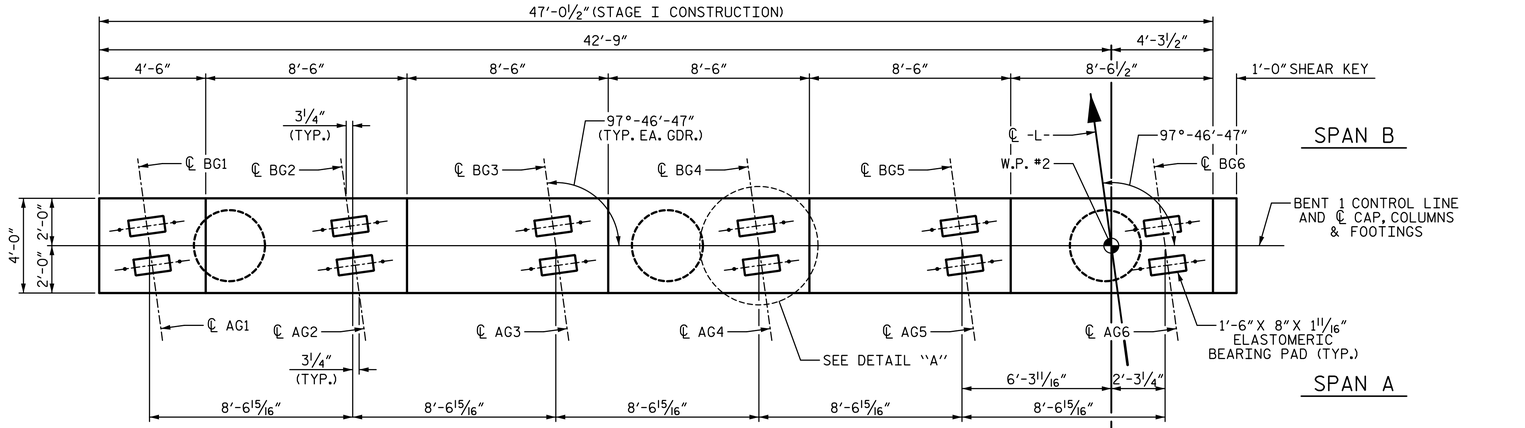


## PLAN

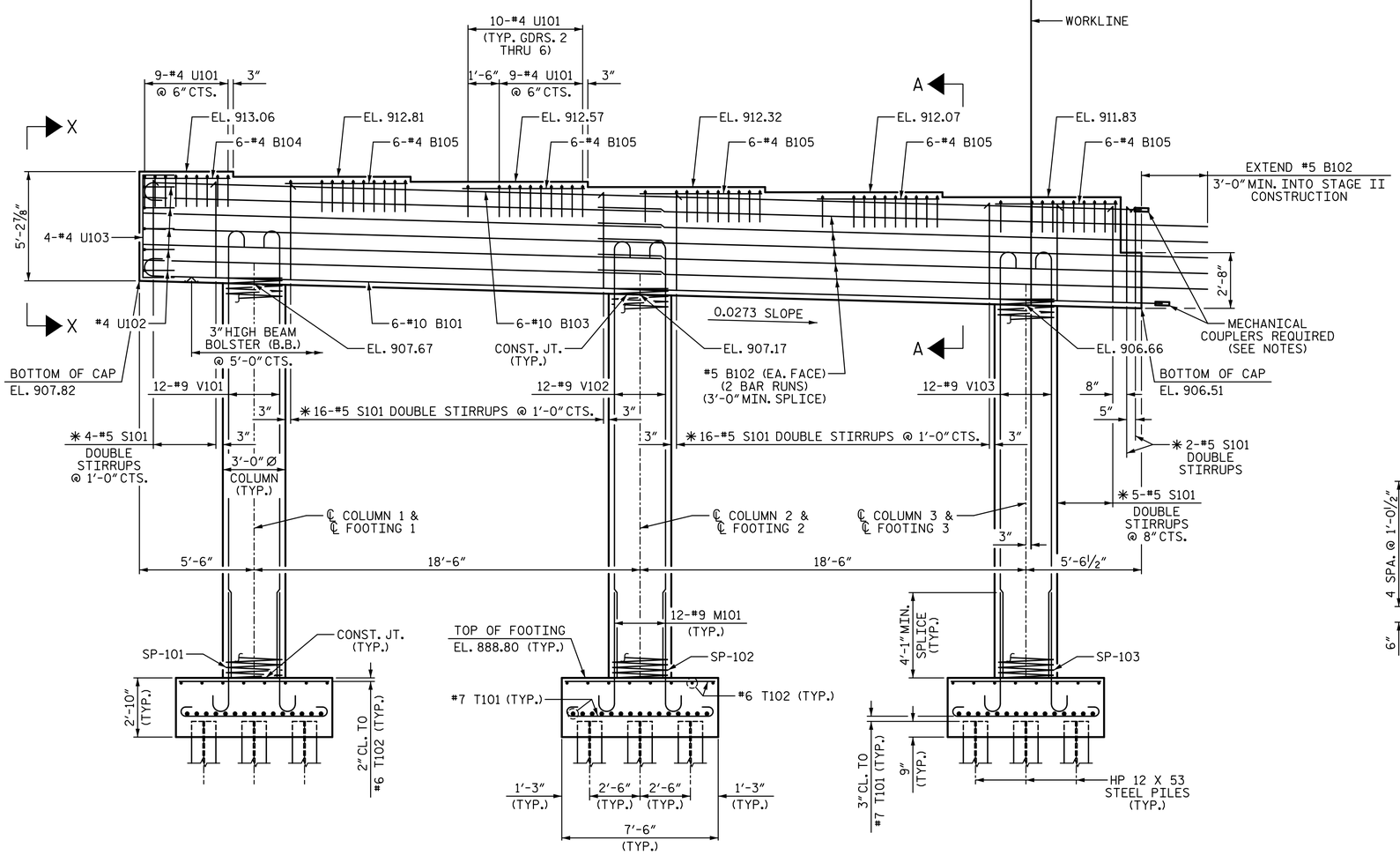





## ELEVATION

## NOTES:

STIRRUPS AND "U" BARS IN CAP MAY BE SHIFTED AS NECESSARY TO CLEAR ANCHOR BOLTS.

✱ INVERT ALTERNATE STIRRUPS.

MECHANICAL COUPLERS SHALL BE USED TO JOIN THE #10 "B" BARS IN STAGE I WITH THE #10 "B" BARS IN STAGE II. THE LOCATION OF THE COUPLERS SHALL BE STAGGERED ON ALTERNATING BARS BY 1 FOOT AND THE STAGE I BARS SHALL BE CUT ACCORDINGLY TO ALLOW A MINIMUM OF 1'-0" AND A MAXIMUM OF 2'-0" EXTENSION INTO STAGE II CONSTRUCTION.

FOR MECHANICAL COUPLERS, SEE MECHANICAL BUTT SPLICE FOR REINFORCING STEEL IN STANDARD SPECIFICAITONS.

THE CONTRACTOR'S ATTENTION IS CALLED TO THE FACT THAT THE LENGTHS OF THE #10 "B" BARS IN THE STAGED CONSTRUCTION JOINT MAY NEED TO ADJUSTED DUE TO THE TYPE OF MECHANICAL BUTT SPLICE CHOSEN BY THE CONTRACTOR. NO ADDITIONAL PAYMENT WILL BE MADE FOR ANY ADJUSTMENTS.

HOOKS ON "V" BARS MAY BE TURNED AS NECESSARY FOR PLACING REINFORCING STEEL.

FOR SECTION A-A, SEE SHEET 3 OF 3.

SEE GENERAL DRAWING "FOUNDATION LAYOUT" FOR ADDITIONAL NOTES FOR DRIVING PILES.

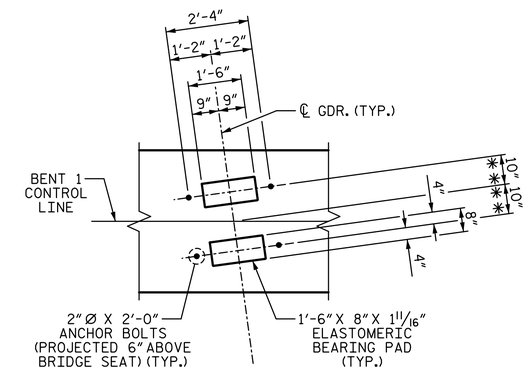


## DETAIL "A"

(TYP. EA. GIRDER)
(✱✱ MEASURED ALONG ℄ GIRDER)

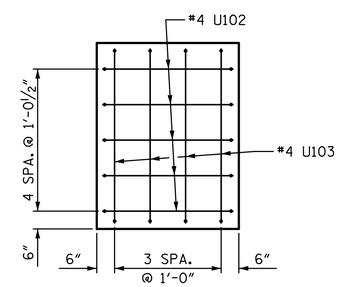


## VIEW X-X

PROJECT NO. U-2729
FORSYTH COUNTY
STATION: 33+99.11 -L-

SHEET 1 OF 3

STATE OF NORTH CAROLINA
DEPARTMENT OF TRANSPORTATION
RALEIGH

SUBSTRUCTURE

BENT 1

STAGE I

WGI
5640 Dillard Drive, Suite 200
Cary, NC 27518
LICENSURE NO. C-4434

NORTH CAROLINA PROFESSIONAL SEAL 18056 ENGINEER JOHN A. BATTS
4/6/2023 | 10:39 AM PDT

DOCUMENT NOT CONSIDERED FINAL UNLESS ALL SIGNATURES COMPLETED

| REVISIONS | | | | | | | SHEET NO. |
|---|---|---|---|---|---|---|---|
| NO. | BY: | DATE: | NO. | BY: | DATE: | | S-45 |
| 1 | | | 3 | | | | TOTAL SHEETS |
| 2 | | | 4 | | | | 59 |

| | | | |
|---|---|---|---|
| DRAWN BY: | T. BANKOVICH | DATE: | 9-22 |
| CHECKED BY: | T.J. BEACH | DATE: | 9-22 |
| DESIGN ENGINEER OF RECORD: | J.A. BATTS | DATE: | 9-22 |

4/6/2023 12:02:08 PM P:\Raleigh\Projects\2018\Division 9 (Mott MacDonald)\U-2729\Structures\Drawings\Final\U2729_SMU_B1_330290.dgn