DocuSign Envelope ID: 3B662C47-BB36-47FC-A7EE-E83AFC878B49

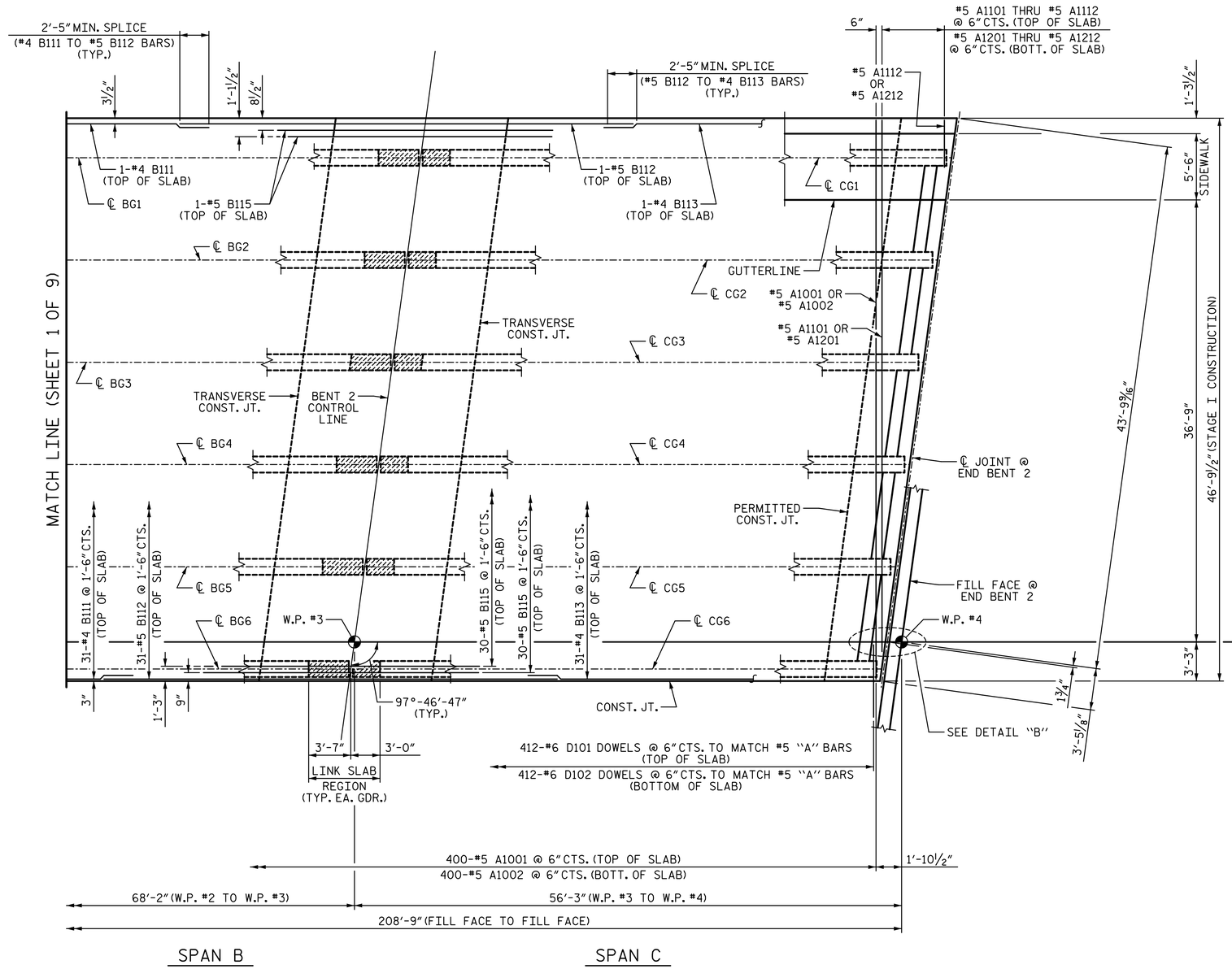

PART PLAN OF SPANS

(TOP & BOTTOM "A" & "D" BARS SHOWN)
(ONLY TOP "B" BARS SHOWN FOR CLARITY)
FOR ADDITIONAL STAGE I DECK SLAB REINFORCEMENT, SEE SHEET 3 OF 9 & SHEET 4 OF 9.

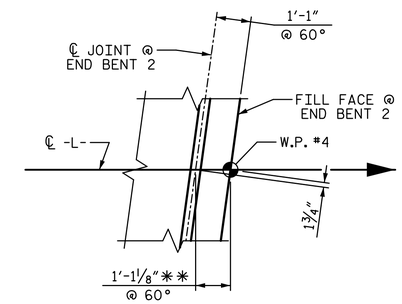

DETAIL "B"

** MEASURED ALONG -L-

PROJECT NO. U-2729
FORSYTH COUNTY
STATION: 33+99.11 -L-

SHEET 2 OF 9

STATE OF NORTH CAROLINA
DEPARTMENT OF TRANSPORTATION
RALEIGH

SUPERSTRUCTURE

PLAN OF SPANS

STAGE I

WGI
5640 Dillard Drive, Suite 200
Cary, NC 27518
LICENSURE NO. C-4434

NORTH CAROLINA PROFESSIONAL SEAL 18056 ENGINEER JOHN A. BATTS
4/6/2023 | 10:39 AM PDT

DOCUMENT NOT CONSIDERED FINAL
UNLESS ALL SIGNATURES COMPLETED

REVISIONS							SHEET NO.
NO.	BY:	DATE:	NO.	BY:	DATE:		S-10
1			3				TOTAL SHEETS
2			4				59

DRAWN BY: T. BANKOVICH DATE: 9-22
CHECKED BY: T.J. BEACH DATE: 9-22
DESIGN ENGINEER OF RECORD: J.A. BATTS DATE: 9-22

4/6/2023 12:01:49 PM P:\Raleigh\Projects\2018\Division 9 (Mott MacDonald)\U-2729\Structures\Drawings\Final\U2729_SMU_S_330290.dgn