DocuSign Envelope ID: 3B662C47-BB36-47FC-A7EE-E83AFC878B49

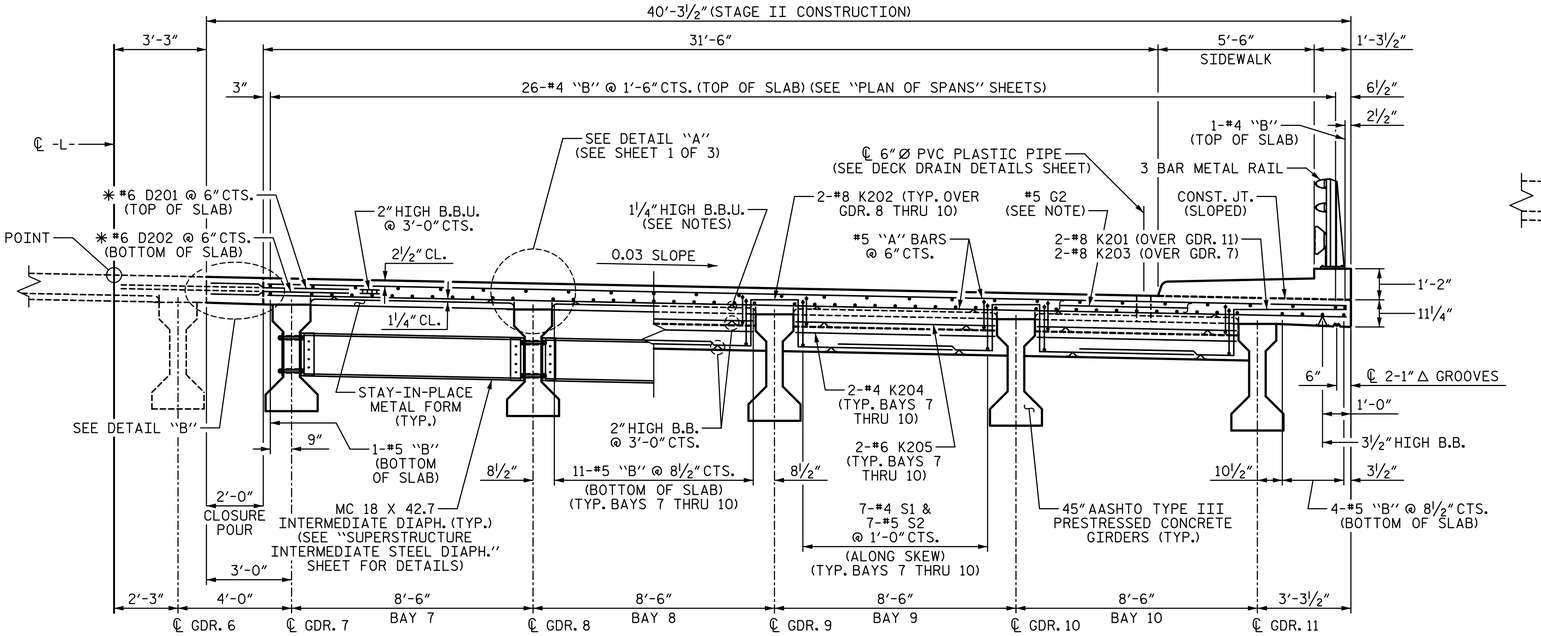

PARTIAL TYPICAL SECTION

(SHOWING INTERMEDIATE DIAPHRAGM)

PARTIAL TYPICAL SECTION

(SHOWING END BENT DIAPHRAGM)

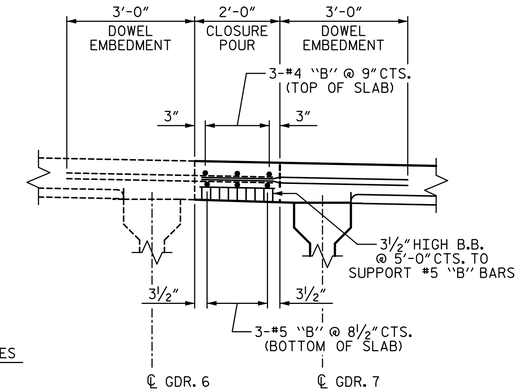

DETAIL "B"

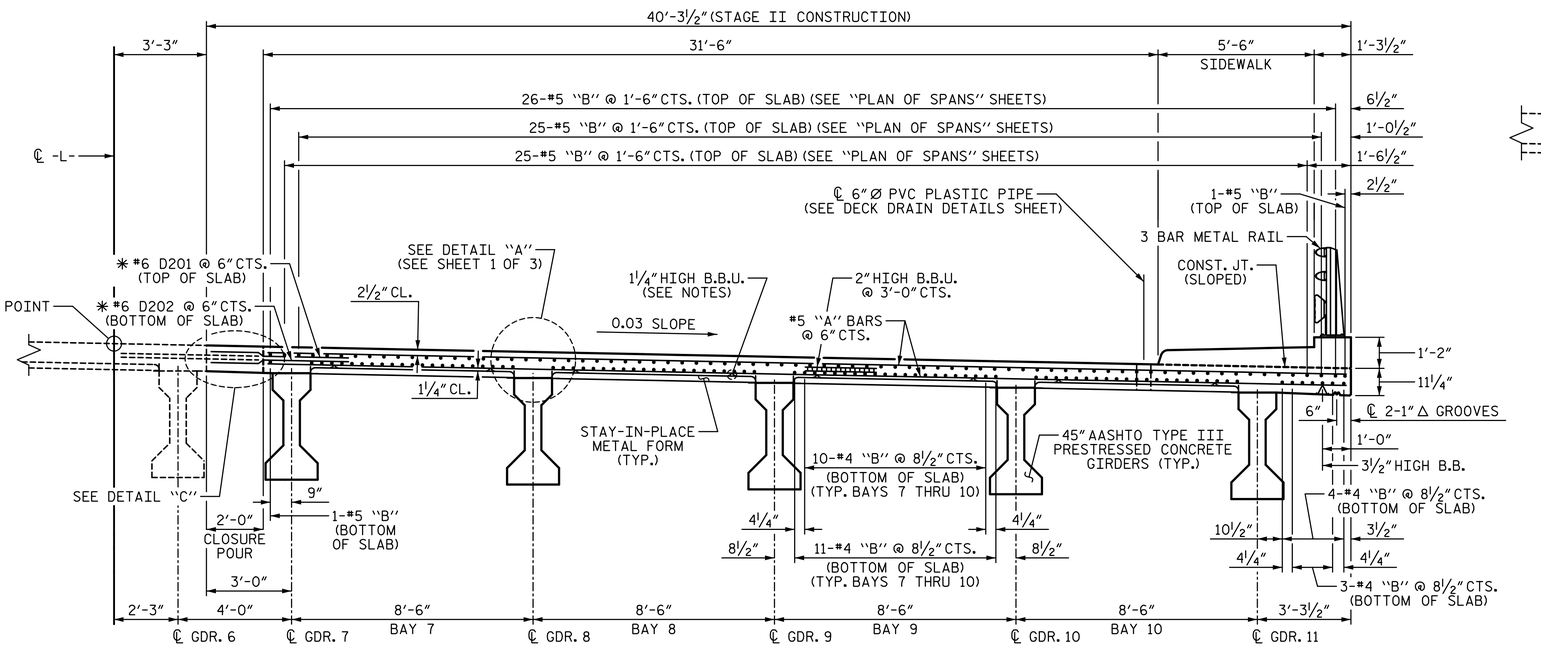

PARTIAL TYPICAL SECTION

(SHOWING LINK SLAB REGION INTERIOR BENT)

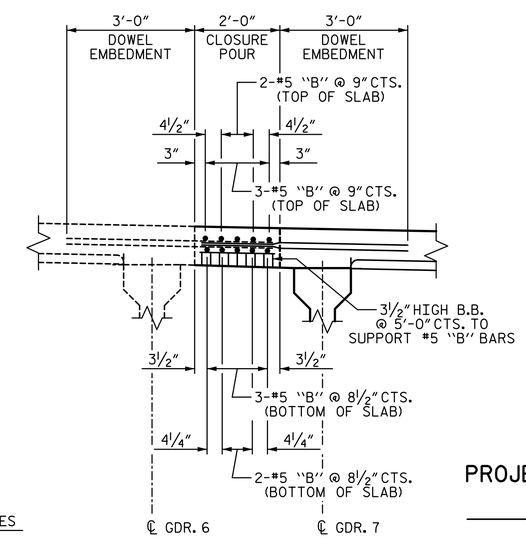

DETAIL "C"

PROJECT NO. U-2729

FORSYTH COUNTY

STATION: 33+99.11 -L-

SHEET 2 OF 3

STATE OF NORTH CAROLINA
DEPARTMENT OF TRANSPORTATION
RALEIGH

SUPERSTRUCTURE

TYPICAL SECTION

STAGE II

WGI
5640 Dillard Drive, Suite 200
Cary, NC 27518

LICENSURE NO. C-4434

NORTH CAROLINA PROFESSIONAL SEAL 18056 ENGINEER JOHN A. BATTS
4/6/2023 | 10:39 AM PDT

DOCUMENT NOT CONSIDERED FINAL UNLESS ALL SIGNATURES COMPLETED

REVISIONS								SHEET NO.
NO.	BY:	DATE:	NO.	BY:	DATE:			S-7
1			3					TOTAL SHEETS
2			4					59

DRAWN BY: T. BANKOVICH DATE: 9-22
CHECKED BY: T.J. BEACH DATE: 9-22
DESIGN ENGINEER OF RECORD: J.A. BATTS DATE: 9-22

4/6/2023 12:01:47 PM P:\Raleigh\Projects\2018\Division 9 (Matt MacDonald)\U-2729\Structures\Drawings\Final\U2729_SMU_TS_330290.dgn