DocuSign Envelope ID: C2A12C08-E5FA-4F18-900C-F2D8DC806637

5/14/99

PROJECT WATER DETAILS

PREPARED IN THE OFFICE OF:
Wooten
300 S. Main Street • Winston-Salem, NC 27101
(803) 722-5326 • thewootencompany.com
License Number : F-0115

PROJECT REFERENCE NO.	SHEET NO.
U-2729	UC-3B

DESIGNED BY: JPM
DRAWN BY: BTH
CHECKED BY: JPM
APPROVED BY: JCG
REVISED:

VERTICAL SCALE 5' 0 5' 10'
HORIZONTAL SCALE 25' 0 25' 50'

NORTH CAROLINA DEPARTMENT OF TRANSPORTATION

WATER LINE AND SEWER LINE CONSTRUCTION SHOWN ON THIS SHEET

UTILITIES ENGINEERING SEC.
PHONE: (919) 707-6690
FAX: (919) 250-4151

NORTH CAROLINA PROFESSIONAL SEAL 18097 ENGINEER JOHN C. GRIFFIN, JR.

DocuSigned by:
5/27/2021
Documents Not Considered Final Unless All Signatures Completed
UTILITY CONSTRUCTION PLANS ONLY

UTILITY CONSTRUCTION

NOTES:
1. VALVE BOX WILL CONFORM TO ASTM A48, CLASS 30 B
2. MINIMUM WEIGHTS:
COVER..... 29 LBS.
TOP SECTION..... 60 LBS.
BOTTOM SECTION.... 49 LBS.
TOTAL.... 138 LBS.

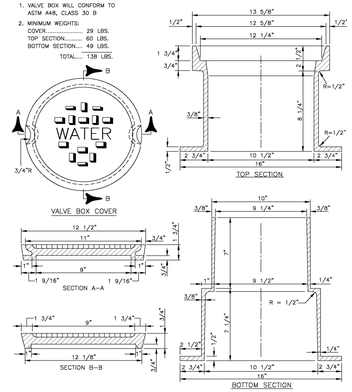

CITY OF WINSTON–SALEM
DEPARTMENT OF PUBLIC WORKS
ENGINEERING DIVISION
N.T.S. REVISED 3–1–17

1 UC-3B CAST IRON VALVE BOX
NOT TO SCALE

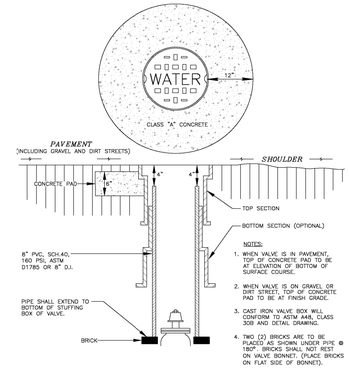

NOTES:
1. WHEN VALVE IS IN PAVEMENT, TOP OF CONCRETE PAD TO BE AT ELEVATION OF BOTTOM OF SURFACE COURSE.
2. WHEN VALVE IS ON GRAVEL OR DIRT STREET, TOP OF CONCRETE PAD TO BE AT FINISH GRADE.
3. CAST IRON VALVE BOX WILL CONFORM TO ASTM A48, CLASS 30B AND DETAIL DRAWING.
4. TWO (2) BRICKS ARE TO BE PLACED AS SHOWN UNDER PIPE @ 180°. BRICKS SHALL NOT REST ON VALVE BONNET. (PLACE BRICKS ON FLAT SIDE OF BONNET).

CITY OF WINSTON–SALEM
DEPARTMENT OF PUBLIC WORKS
ENGINEERING DIVISION
N.T.S. REVISED 3–1–17

2 UC-3B VALVE BOX INSTALLATION
NOT TO SCALE

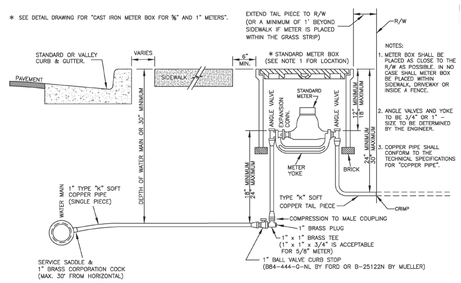

NOTES:
1. METER BOX SHALL BE PLACED AS CLOSE TO THE R/W AS POSSIBLE. IN NO CASE SHALL METER BOX BE PLACED WITHIN SIDEWALK, DRIVEWAY OR INSIDE A FENCE.
2. ANGLE VALVES AND YOKE TO BE 3/4" OR 1" SIZE, TO BE DETERMINED BY THE ENGINEER.
3. COPPER PIPE SHALL CONFORM TO THE TECHNICAL SPECIFICATIONS FOR "COPPER PIPE".

CITY OF WINSTON–SALEM
DEPARTMENT OF PUBLIC WORKS
ENGINEERING DIVISION
N.T.S. REVISED 4–17–2020

3 UC-3B 1" WATER CONNECTION (WITH CURB & GUTTER/SINGLE FAMILY)
NOT TO SCALE

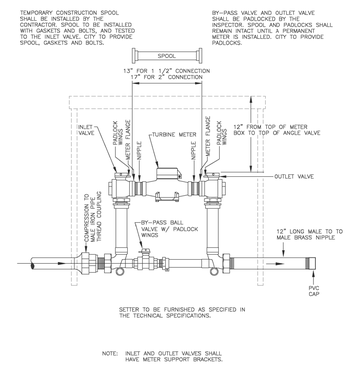

NOTE: INLET AND OUTLET VALVES SHALL HAVE METER SUPPORT BRACKETS.

CITY OF WINSTON–SALEM
DEPARTMENT OF PUBLIC WORKS
ENGINEERING DIVISION
N.T.S. REVISED 3–1–17

4 UC-3B 1 1/2"AND 2" WATER CONNECTION
NOT TO SCALE

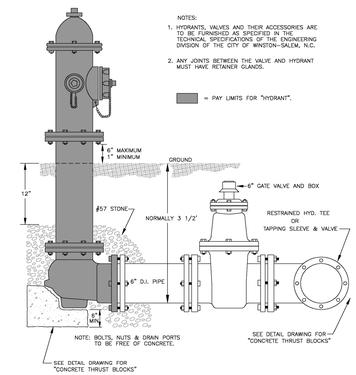

NOTES:
1. HYDRANTS, VALVES AND THEIR ACCESSORIES ARE TO BE FURNISHED AS SPECIFIED IN THE TECHNICAL SPECIFICATIONS OF THE ENGINEERING DIVISION OF THE CITY OF WINSTON-SALEM, N.C.
2. ANY JOINTS BETWEEN THE VALVE AND HYDRANT MUST HAVE RETAINER GLANDS.

= PAY LIMITS FOR "HYDRANT".

CITY OF WINSTON–SALEM
DEPARTMENT OF PUBLIC WORKS
ENGINEERING DIVISION
N.T.S. REVISED 3–1–17

5 UC-3B HYDRANT AND VALVE INSTALLATION
NOT TO SCALE

DocuSign Envelope ID: C2A12C08-E5FA-4F18-900C-F2D8DC806637