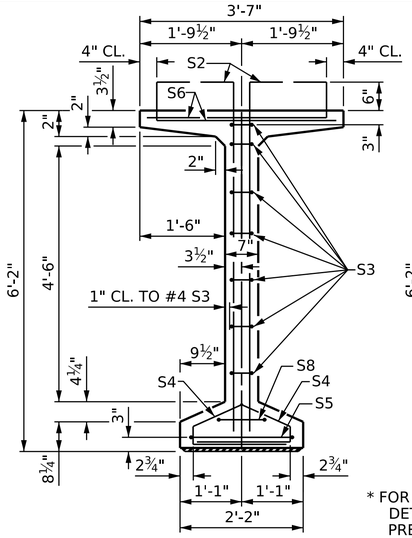

SECTION A-A

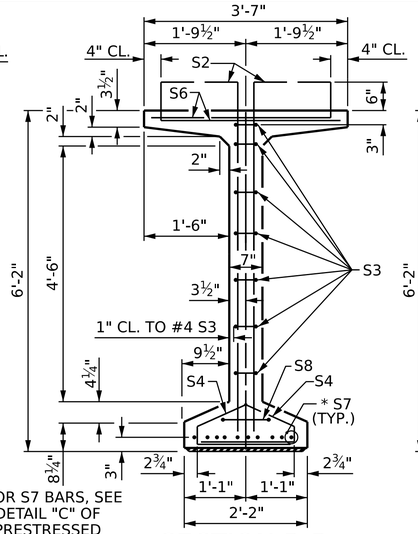

* FOR S7 BARS, SEE DETAIL "C" OF PRESTRESSED CONCRETE GIRDER CONTINUOUS FOR LIVE LOAD DETAILS SHEET

SECTION B-B

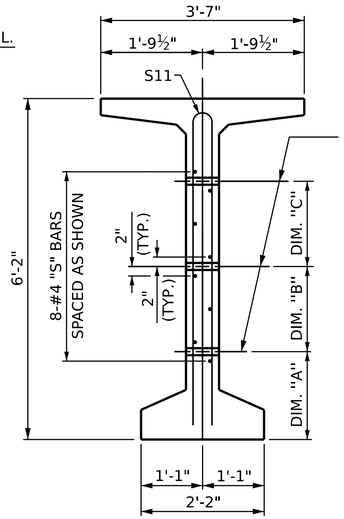

SECTION C-C

(S1, S6 AND S9 BARS NOT SHOWN)

DEBONDING LEGEND

- ● FULLY BONDED STRANDS
- STRANDS DEBONDED FOR 8'-0" FROM END OF GIRDER
- STRANDS DEBONDED FOR 10'-0" FROM END OF GIRDER
- STRANDS DEBONDED FOR 12'-0" FROM END OF GIRDER

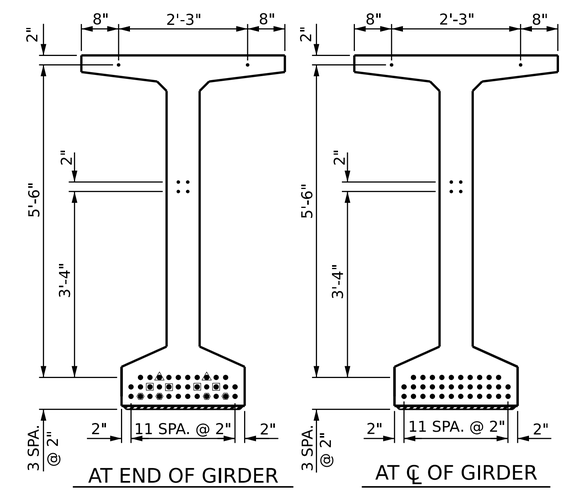

0.6" ∅ LOW RELAXATION STRAND LAYOUT

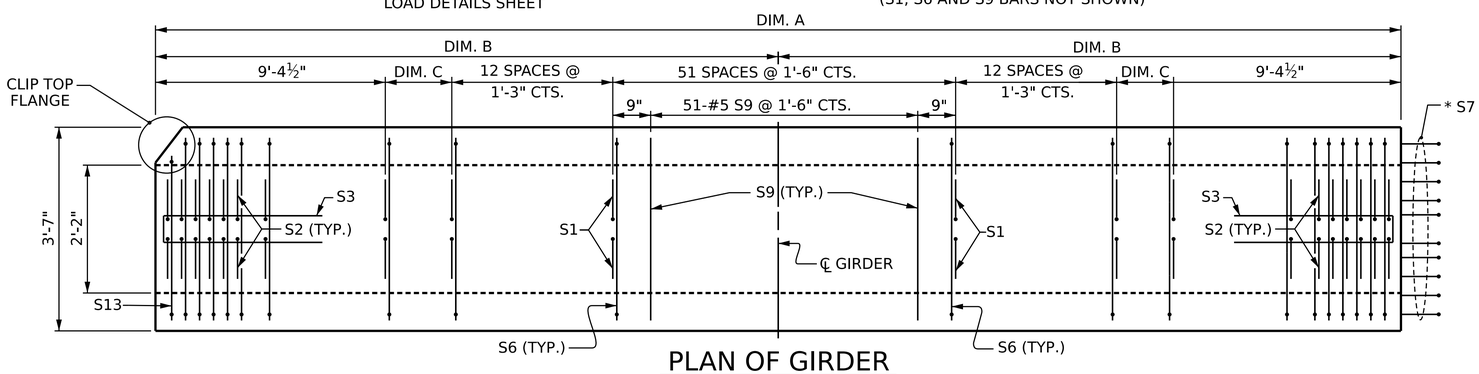

PLAN OF GIRDER

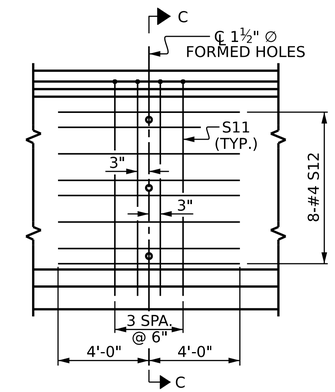

PARTIAL ELEVATION

SHOWING INTERMEDIATE STEEL DIAPHRAGM REINFORCING STEEL FOR ALL GIRDERS

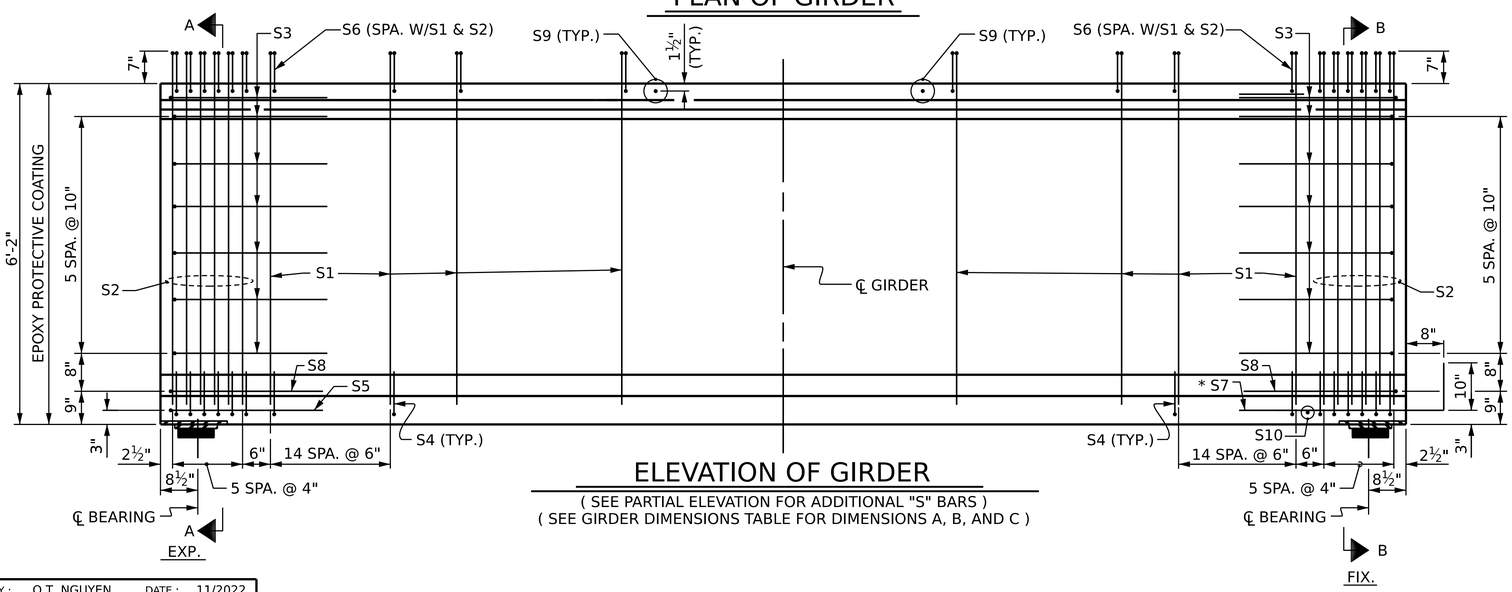

ELEVATION OF GIRDER

(SEE PARTIAL ELEVATION FOR ADDITIONAL "S" BARS)
(SEE GIRDER DIMENSIONS TABLE FOR DIMENSIONS A, B, AND C)

0.6"∅ L.R. GRADE 270 STRANDS

AREA (SQUARE INCHES)	ULTIMATE STRENGTH (LBS. PER STRAND)	APPLIED PRESTRESS (LBS. PER STRAND)
0.217	58,600	43,950

REINFORCING STEEL FOR ONE GDR

BAR	NUMBER	SIZE	TYPE	LENGTH	WEIGHT
S1	212	#4	1	7'-0"	991
S2	24	#5	1	7'-0"	175
S3	14	#4	2	8'-5"	79
S4	84	#4	3	3'-2"	178
S5	1	#5	2	9'-10"	10
S6	236	#5	4	4'-4"	1067
* S7	10	#5	STR	3'-8"	38
S8	2	#5	2	9'-0"	19
S9	51	#5	STR	3'-3"	173
S10	1	#3	STR	1'-10"	1
S11	8	#5	5	11'-10"	99
S12	16	#4	STR	8'-0"	86
S13	2	#5	4	3'-11"	8

* NOTE: S7 BARS SHALL BE BENT BEFORE SHIPMENT. HEAT BENDING SHALL NOT BE ALLOWED.

BAR TYPES

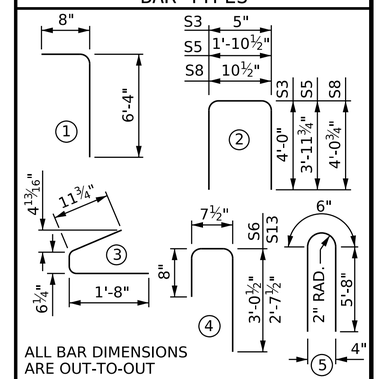

ALL BAR DIMENSIONS ARE OUT-TO-OUT

QUANTITIES FOR ONE GIRDER

	REINFORCING STEEL	9,500 PSI CONCRETE	0.6" ∅ L.R. STRANDS
GIRDERS INT. & EXT.	LB.	C.Y.	No.
	2924	28.9	40

GIRDERS REQUIRED

NUMBER	LENGTH	TOTAL LENGTH
5	DIM. A	633.58'

GIRDER DIMENSION TABLE

GIRDER #	DIM. A	DIM. B	DIM. C
1	126'-7 3/16"	63'-3 5/8"	8 1/8"
2	126'-7 7/8"	63'-3 15/16"	8 7/16"
3	126'-8 9/16"	63'-4 5/16"	8 13/16"
4	126'-9 5/16"	63'-4 5/8"	9 1/8"
5	126'-10"	63'-5"	9 1/2"

PROJECT NO. B-5721

ROCKINGHAM COUNTY

STATION: 21+64.00 -L-

SHEET 1 OF 4

NORTH CAROLINA PROFESSIONAL SEAL 36871 ENGINEER FRANCESCA LEA

DocuSigned by: Francesca Lea
B79DADB65D584EF...

03/23/2023

STATE OF NORTH CAROLINA
DEPARTMENT OF TRANSPORTATION
RALEIGH

STANDARD

74" PRESTRESSED CONCRETE MODIFIED BULB TEE CONTINUOUS FOR LIVE LOAD - SPAN A

REVISIONS						SHEET NO.
NO.	BY:	DATE:	NO.	BY:	DATE:	S-12
1			3			TOTAL SHEETS
2			4			31

DOCUMENT NOT CONSIDERED FINAL UNLESS ALL SIGNATURES COMPLETED

ASSEMBLED BY :	Q.T. NGUYEN	DATE :	11/2022
CHECKED BY :	F. LEA	DATE :	12/2022
DRAWN BY :	EEM 2/6/97	REV. 1/15	MAA/TMG
CHECKED BY :	VAP 2/6/97	REV. 12/17	MAA/THC
		REV. 11/21	BNB/AAI

2/16/2023
R:\Structures\Plans\401_021_B5721_SMU_G1_S12_780124.dgn
flea

STD. NO. PCG8 (SHT. 3)