DocuSign Envelope ID: 1D44A8E2-99FC-4CD7-9C45-8CFEBAF7E23A

11/21/2022 10:19:07 AM P:\Raleigh\Projects\2018\Division 13 (SEA)\B-5869 (Burke 99)\Structures\Drawings(2)\Final(2)\B5869_SMU_B2_110099(2).dgn

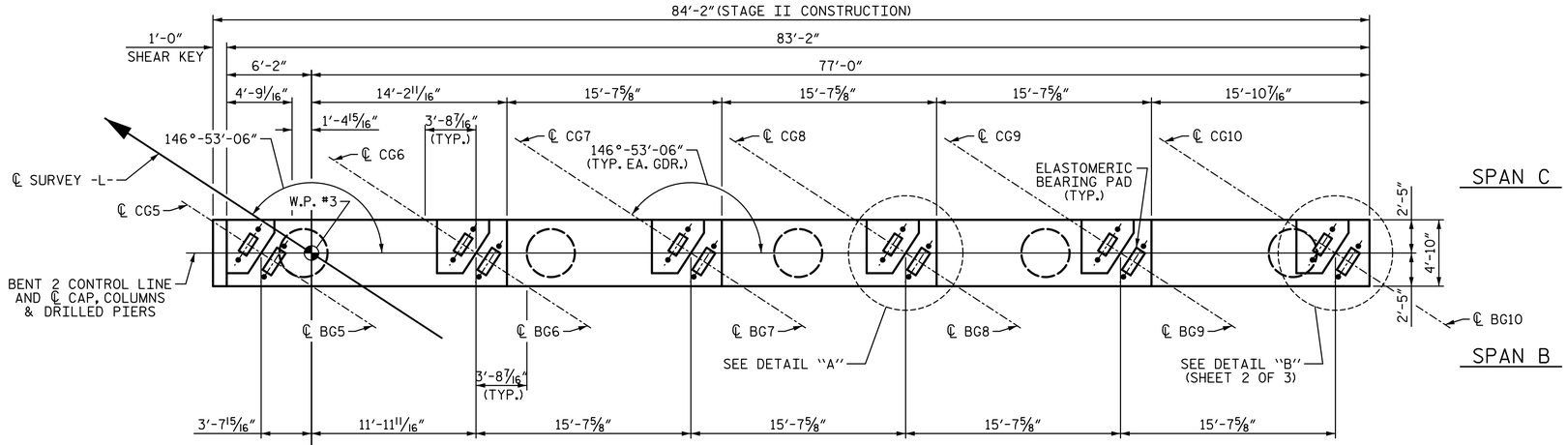

PLAN

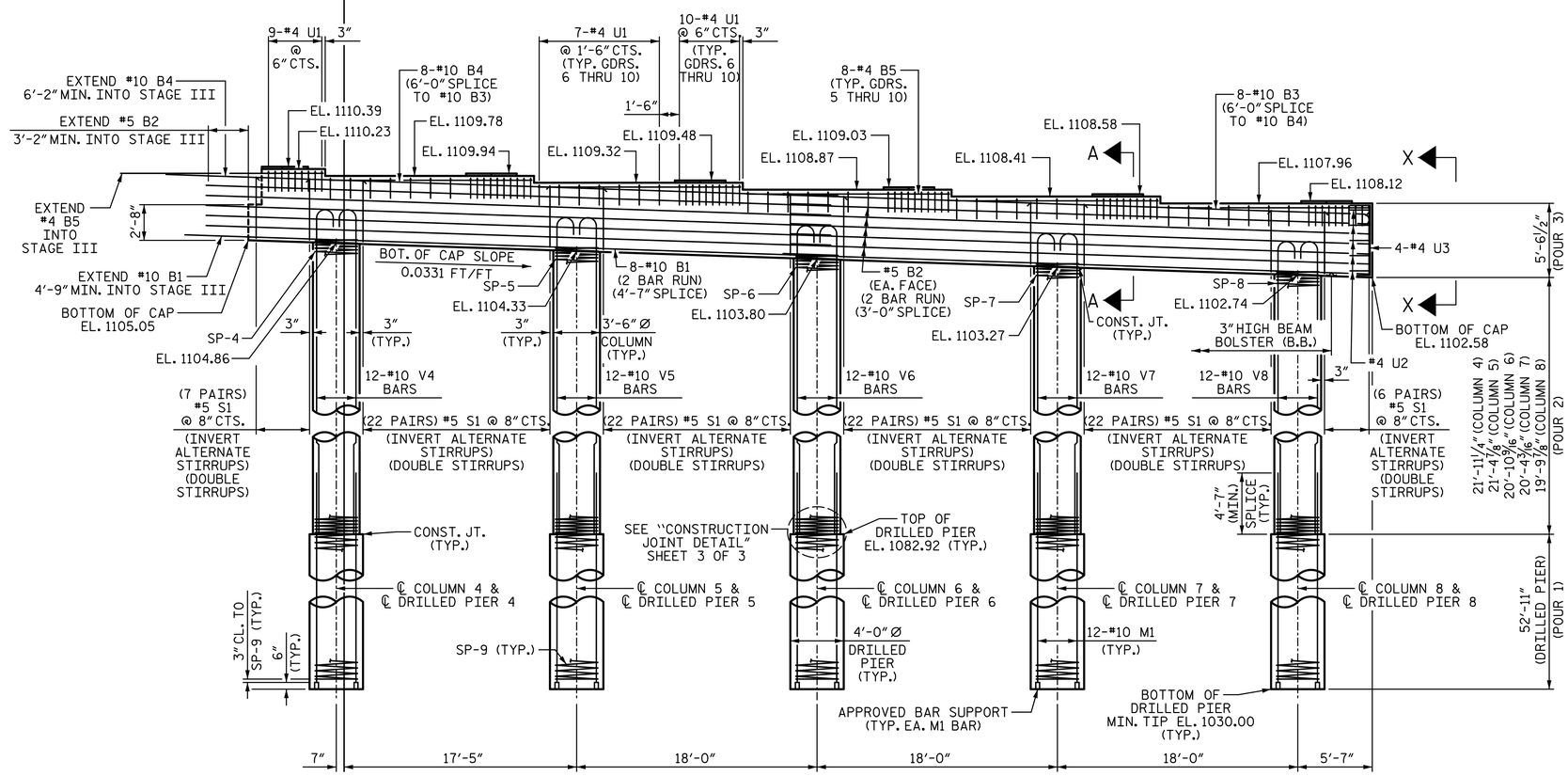

ELEVATION

NOTES:

STIRRUPS AND "U" BARS IN CAP MAY BE SHIFTED AS NECESSARY TO CLEAR ANCHOR BOLTS.

STIRRUPS IN CAP ARE TO BE ALTERNATELY INVERTED.

HOOKS ON "V" BARS MAY BE TURNED AS NECESSARY FOR PLACING REINFORCING STEEL.

FOR SECTION A-A, SEE SHEET 3 OF 3.

ALL STEEL IN THE DRILLED PIERS IS INCLUDED IN THE PAY ITEMS FOR "REINFORCING STEEL" AND "SPIRAL COLUMN REINFORCING STEEL".

THE CONTRACTOR'S ATTENTION IS CALLED TO THE FACT THAT THE LONGITUDINAL REINFORCEMENT FOR THE DRILLED PIERS IS DETAILED WITH 3 FEET OF EXTRA LENGTH.

THE LOCATION OF THE CONSTRUCTION JOINT IN THE DRILLED PIERS IS BASED ON AN APPROXIMATE GROUND LINE ELEVATION. IF THE CONSTRUCTION JOINT IS ABOVE THE ACTUAL GROUND LINE ELEVATION, THE CONTRACTOR SHALL PLACE THE CONSTRUCTION JOINT 1 FT. BELOW THE GROUND LINE.

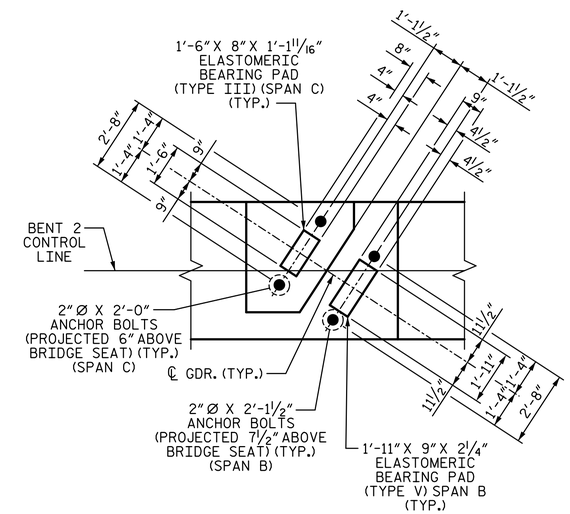

DETAIL "A"

(TYP. EA. GIRDER)

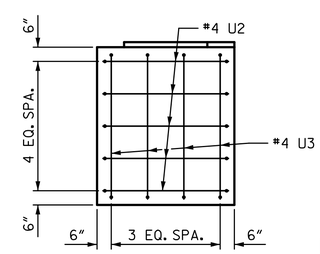

VIEW X-X

PROJECT NO. B-5869

BURKE COUNTY

STATION: 21+62.39 -L-

SHEET 1 OF 3

STATE OF NORTH CAROLINA
DEPARTMENT OF TRANSPORTATION
RALEIGH

SUBSTRUCTURE

BENT 2

STAGE II

REVISIONS						SHEET NO.
NO.	BY:	DATE:	NO.	BY:	DATE:	S-59
1			3			TOTAL SHEETS
2			4			72

WGI
5640 Dillard Drive, Suite 200
Cary, NC 27518
LICENSURE NO. C-4434

NORTH CAROLINA PROFESSIONAL SEAL 023908 ENGINEER MARK A. AVERETTE
11/21/2022 | 7:43 AM PST

DOCUMENT NOT CONSIDERED FINAL UNLESS ALL SIGNATURES COMPLETED

DRAWN BY:	S.D. COOPER	DATE:	3-2022
CHECKED BY:	M. AVERETTE	DATE:	3-2022
DESIGN ENGINEER OF RECORD:	M. AVERETTE	DATE:	3-2022