DocuSign Envelope ID: 1D44A8E2-99FC-4CD7-9C45-8CFEBAF7E23A

11/21/2022 10:19:03 AM P:\Raleigh\Projects\2018\Division 13 (SEA)\B-5869 (Burke 99)\Structures\Drawings(2)\Final(2)\B5869_SMU_E1_110099(2).dgn

BAR TYPES

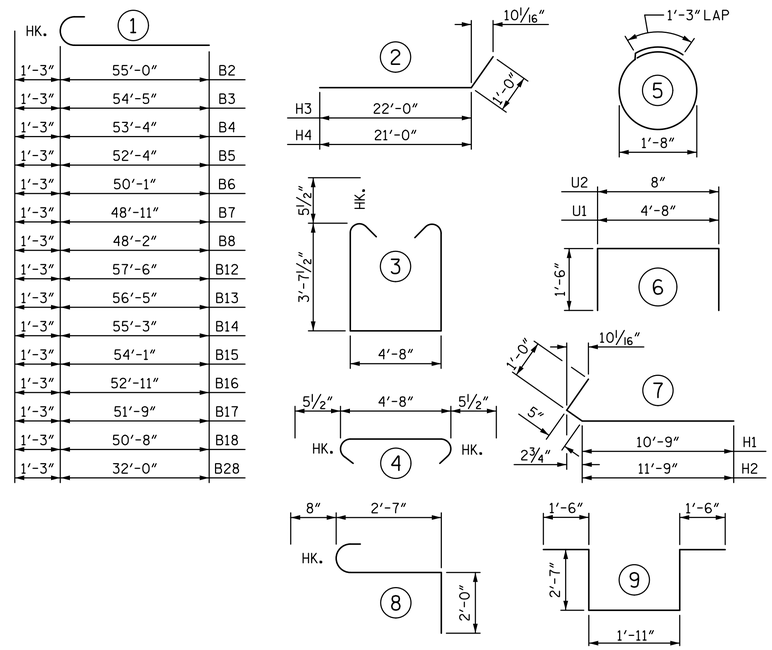

ALL BAR DIMENSIONS ARE OUT TO OUT

BILL OF MATERIAL

END BENT 1

STAGE II

BAR	NO.	SIZE	TYPE	LENGTH	WEIGHT
B1	14	#9	STR	55'-0"	2618
B2	1	#9	1	56'-3"	191
B3	1	#9	1	55'-8"	189
B4	1	#9	1	54'-7"	186
B5	1	#9	1	53'-7"	182
B6	1	#9	1	51'-4"	175
B7	1	#9	1	50'-2"	171
B8	1	#9	1	49'-5"	168
B9	18	#5	STR	37'-0"	695
B10	12	#4	STR	35'-6"	285
B11	24	#4	STR	4'-8"	75
B12	1	#9	1	58'-9"	200
B13	1	#9	1	57'-8"	196
B14	1	#9	1	56'-6"	192
B15	1	#9	1	55'-4"	188
B16	1	#9	1	54'-2"	184
B17	1	#9	1	53'-0"	180
B18	1	#9	1	51'-11"	177
B19	7	#4	STR	7'-3"	34
B20	28	#4	STR	15'-5"	288
B21	1	#4	STR	31'-3"	21
B22	1	#4	STR	30'-2"	20
B23	1	#4	STR	29'-0"	19
B24	1	#4	STR	27'-10"	19
B25	1	#4	STR	26'-9"	18
B26	1	#4	STR	25'-7"	17
B27	1	#4	STR	24'-6"	16
H3	16	#4	2	23'-0"	246
H4	16	#4	2	22'-0"	235
K1	30	#4	STR	36'-7"	733

BAR	NO.	SIZE	TYPE	LENGTH	WEIGHT
K2	4	#4	STR	5'-0"	13
S1	88	#5	3	12'-10"	1178
S2	88	#5	4	5'-7"	512
S3	40	#4	5	6'-6"	174
S4	3	#6	8	5'-3"	24
S5	3	#6	9	10'-1"	45
U1	67	#4	6	7'-8"	343
U2	97	#4	6	3'-8"	238
V1	194	#5	STR	9'-1"	1838
V2	53	#5	STR	10'-11"	603

TOTAL REINFORCING STEEL 12886 LB

CLASS A CONCRETE BREAKDOWN
POUR 1
(CAP, COLLARS & LOWER WING) 58.2 CY
POUR 2
(CAP & COLLARS) 34.6 CY
POUR 3
(UPPER WINGS & BACKWALL) 24.2 CY
TOTAL 117.0 CY

HP 12 X 53 STEEL PILES
NO. 12 660 LF

PILE DRIVING EQUIPMENT SETUP
HP 12 X 53 STEEL PILES 12 EA

STAGE III

BAR	NO.	SIZE	TYPE	LENGTH	WEIGHT
B11	16	#4	STR	4'-8"	50
B28	14	#9	1	33'-3"	1583
B29	7	#9	STR	34'-4"	817
B30	12	#5	STR	32'-8"	409
B31	8	#4	STR	32'-5"	173
B32	7	#9	STR	35'-4"	841
B33	7	#4	STR	9'-7"	45
B34	21	#4	STR	14'-8"	206
H1	27	#6	7	12'-2"	493
H2	27	#6	7	13'-2"	534
K3	20	#4	STR	32'-5"	433
K4	2	#4	STR	7'-3"	10
K5	2	#4	STR	7'-5"	10
S1	56	#5	3	12'-10"	750
S2	56	#5	4	5'-7"	326
S3	28	#4	5	6'-6"	122
U1	36	#4	6	7'-8"	184
U2	54	#4	6	3'-8"	132
V1	108	#5	STR	9'-1"	1023
V3	41	#5	STR	11'-2"	478

TOTAL REINFORCING STEEL 8619 LB

CLASS A CONCRETE BREAKDOWN
POUR 1 53.6 CY
(CAP, COLLARS & LOWER WING)
POUR 2 15.2 CY
(UPPER WING & BACKWALL)
TOTAL 68.8 CY

HP 12 X 53 STEEL PILES
NO. 6 330 LF

PILE DRIVING EQUIPMENT SETUP
HP 12 X 53 STEEL PILES 6 EA

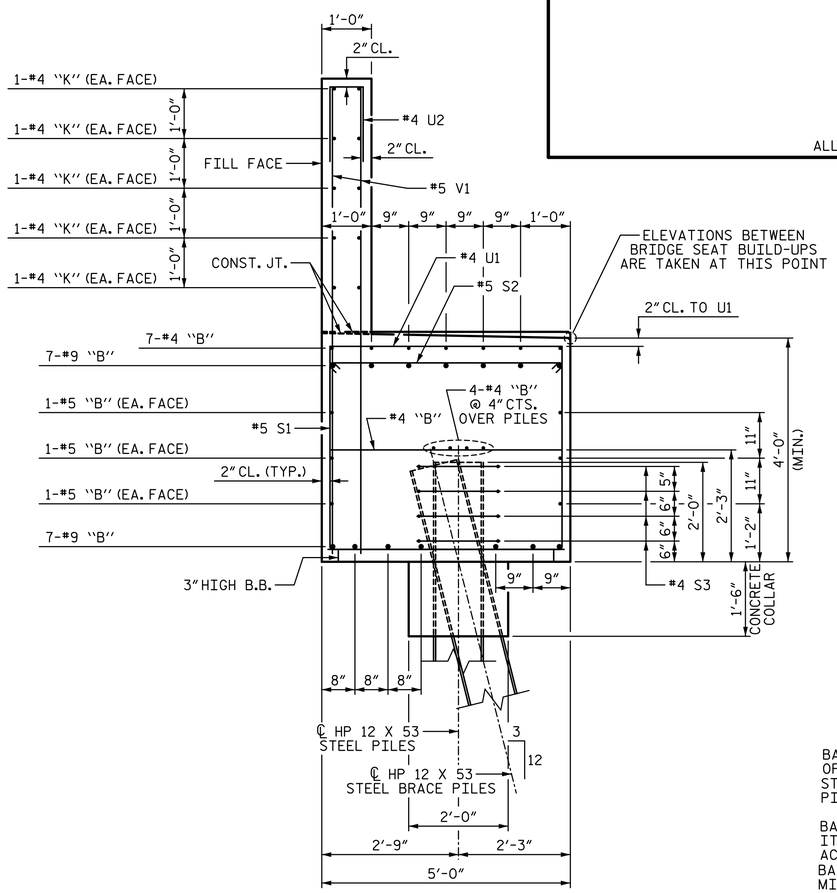

SECTION A-A

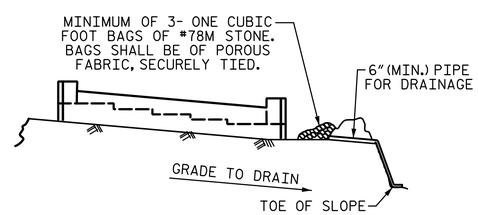

BAGGED STONE AND PIPE SHALL BE PLACED IMMEDIATELY AFTER COMPLETION OF END BENT EXCAVATION. PIPE MAY BE EITHER CONCRETE, CORRUGATED STEEL, CORRUGATED ALUMINUM ALLOY, OR CORRUGATED PLASTIC. PERFORATED PIPE WILL NOT BE ALLOWED.

BAGGED STONE SHALL REMAIN IN PLACE UNTIL THE ENGINEER DIRECTS THAT IT BE REMOVED. THE CONTRACTOR SHALL REMOVE AND DISPOSE OF SILT ACCUMULATIONS AT BAGGED STONE WHEN SO DIRECTED BY THE ENGINEER. BAGS SHALL BE REMOVED AND REPLACED WHENEVER THE ENGINEER DETERMINES THAT THEY HAVE DETERIORATED AND LOST THEIR EFFECTIVENESS.

NO SEPARATE PAYMENT WILL BE MADE FOR THIS WORK AND THE ENTIRE COST OF THIS WORK SHALL BE INCLUDED IN THE UNIT CONTRACT PRICE BID FOR THE SEVERAL PAY ITEMS.

TEMPORARY DRAINAGE AT END BENT

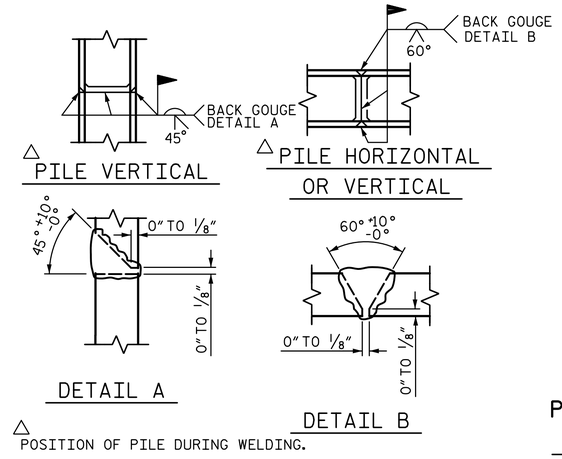

△ POSITION OF PILE DURING WELDING.

PILE SPLICE DETAILS

PROJECT NO. B-5869
BURKE COUNTY
STATION: 21+62.39 -L-

SHEET 5 OF 5

STATE OF NORTH CAROLINA
DEPARTMENT OF TRANSPORTATION
RALEIGH
SUBSTRUCTURE

END BENT 1

WGI
5640 Dillard Drive, Suite 200
Cary, NC 27518
LICENSURE NO. C-4434

NORTH CAROLINA PROFESSIONAL SEAL 023908 ENGINEER MARK A. AVERETTE
11/21/2022 | 7:43 AM PST

DOCUMENT NOT CONSIDERED FINAL UNLESS ALL SIGNATURES COMPLETED

REVISIONS						
NO.	BY:	DATE:	NO.	BY:	DATE:	
1			3			
2			4			

SHEET NO. S-55
TOTAL SHEETS 72

DRAWN BY:	S.D. COOPER	DATE:	3-2022
CHECKED BY:	M. AVERETTE	DATE:	3-2022
DESIGN ENGINEER OF RECORD:	M. AVERETTE	DATE:	3-2022