DocuSign Envelope ID: 984D23BA-5369-4742-851F-804342DD9AC8

PROJECT REFERENCE NO.	SHEET NO.
R-5751	2A-6

TEMPORARY PAVEMENT DESIGN ENGINEER	ROADWAY DESIGN ENGINEER	PAVEMENT DESIGN ENGINEER
1/3/2023	1/3/2023	1/3/2023

DOCUMENT NOT CONSIDERED FINAL UNLESS ALL SIGNATURES COMPLETED

RS&H
8521 SIX FORKS ROAD, SUITE 400
RALEIGH, NC 27615
NC FIRM LICENSE No: F-0493

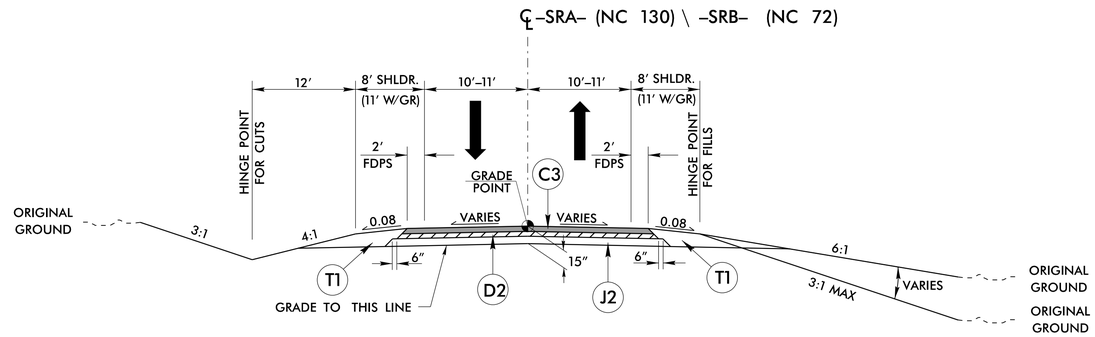

TYPICAL SECTION NO. 9

–SRA– STA. 10+12.09 TO –SRA– STA. 12+20.00
–SRB– STA. 10+13.23 TO –SRB– STA. 11+80.00

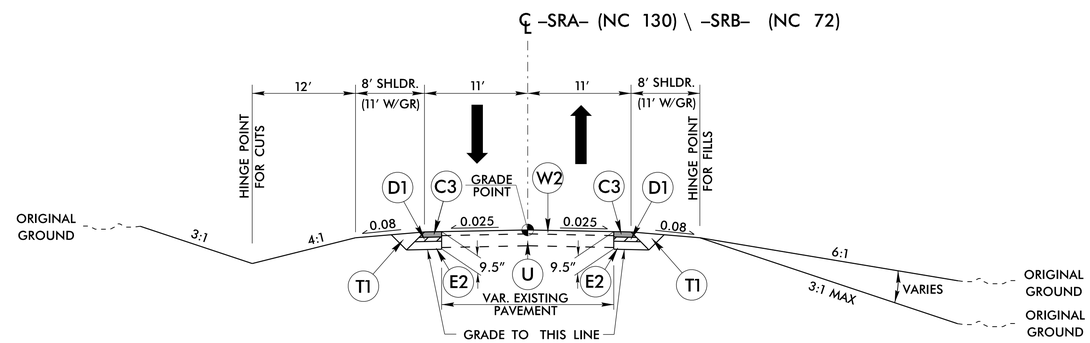

TYPICAL SECTION NO. 10

–SRA– STA. 12+20.00 TO –SRA– STA. 13+50.00
–SRB– STA. 11+80.00 TO –SRB– STA. 14+00.00

C2	2.0″ S9.5B
C3	3.0″ S9.5B
C5	1.5″ S9.5C
D1	2.5″ I19.0C
D2	4.0″ I19.0C
E2	4.0″ B25.0C
P	PRIME COAT
J1	6″ AGG. BASE
J2	8″ AGG. BASE
T1	EARTH MATERIAL
U	EXIST. PAVEMENT
W2	WEDGING

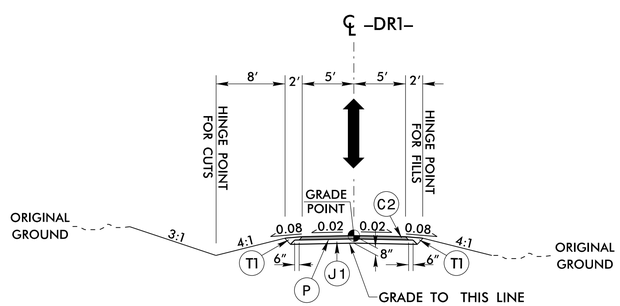

TYPICAL SECTION NO. 11

–DR1– STA. 10+12.01 TO STA. 10+90.00

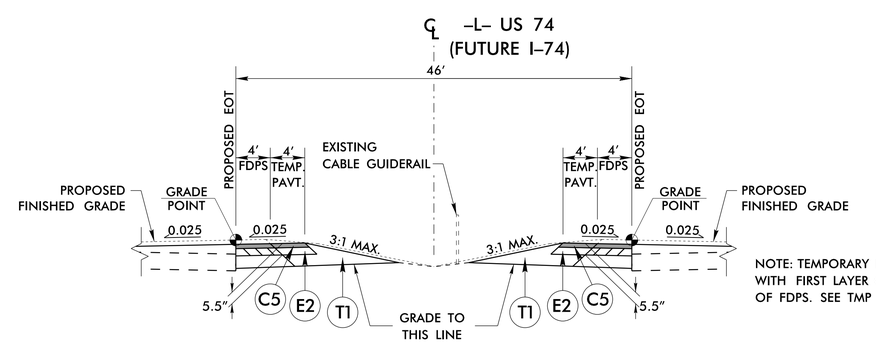

NOTE: TEMPORARY PAVEMENT ALIGNS WITH FIRST LAYER OF SURFACE COURSE OF FDPS. SEE TMP FOR MORE DETAILS.

TYPICAL SECTION NO. 12 – TEMPORARY PAVEMENT

–L– STA. 13+50.00 TO –L– STA. 39+08.75 MED. LT.
–L– STA. 44+29.23 TO –L– STA. 61+00.78 MED. LT.
–L– STA. 62+36.39 TO –L– STA. 73+05.63 MED. LT.
–L– STA. 11+80.00 TO –L– STA. 39+10.45 MED. RT.
–L– STA. 39+85.10 TO –L– STA. 55+54.54 MED. RT.
–L– STA. 62+37.57 TO –L– STA. 73+05.63 MED. RT.

6/2/99
03-JAN-2023 13:24
R:\Roadway\Proj\R5751_Rdy_typ.dgn
$$$$USERNAME$$$$