DocuSign Envelope ID: 984D23BA-5369-4742-851F-804342DD9AC8

PROJECT REFERENCE NO.	SHEET NO.
R-5751	2A-5

ROADWAY DESIGN ENGINEER	PAVEMENT DESIGN ENGINEER
NORTH CAROLINA PROFESSIONAL SEAL ENGINEER JARED M. BOND	NORTH CAROLINA PROFESSIONAL SEAL ENGINEER JONATHAN P. MANKE
1/3/2023	1/3/2023

DOCUMENT NOT CONSIDERED FINAL UNLESS ALL SIGNATURES COMPLETED

RS&H
8521 SIX FORKS ROAD, SUITE 400
RALEIGH, NC 27615
NC FIRM LICENSE No: F-0493

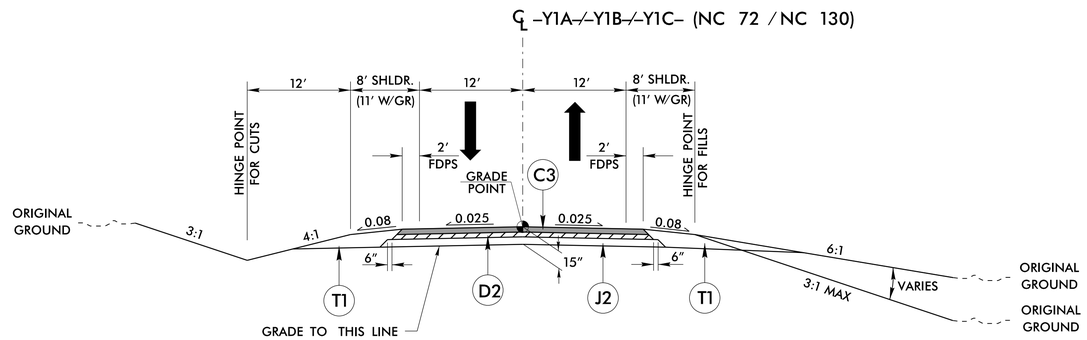

TYPICAL SECTION NO. 7

–Y1A– STA. 18+50.00 TO –Y1A– STA. 34+09.45
–Y1B– STA. 35+59.45 TO –Y1B– STA. 37+05.89 (BEGIN BRIDGE)
–Y1B– STA. 38+93.89 (END BRIDGE) TO –Y1B– STA. 40+40.33
–Y1C– STA. 41+90.33 TO –Y1C– STA. 53+50.00

A1	12″ TRUCK APRON
C3	3.0″ S9.5B
D2	4.0″ I19.0C
J2	8″ AGG. BASE
R1	1′-6″ C. & G.
R2	2′-9″ C. & G.
R3	9″ X 18″ CURB
R7	4″ CONC. COVER
T1	EARTH MATERIAL

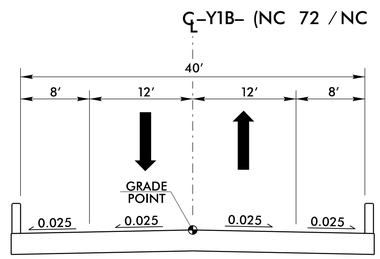

TYPICAL SECTION ON STRUCTURE

–Y1B– STA. 37+05.89 (BEGIN BRIDGE) TO –Y1B– STA. 38+93.89 (END BRIDGE)

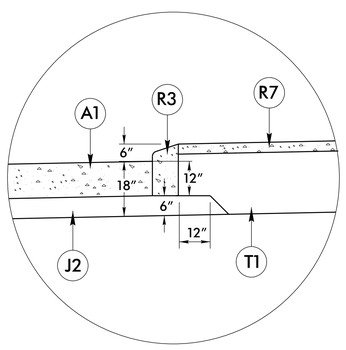

DETAIL D
(MIRROR FOR RIGHT SIDE)

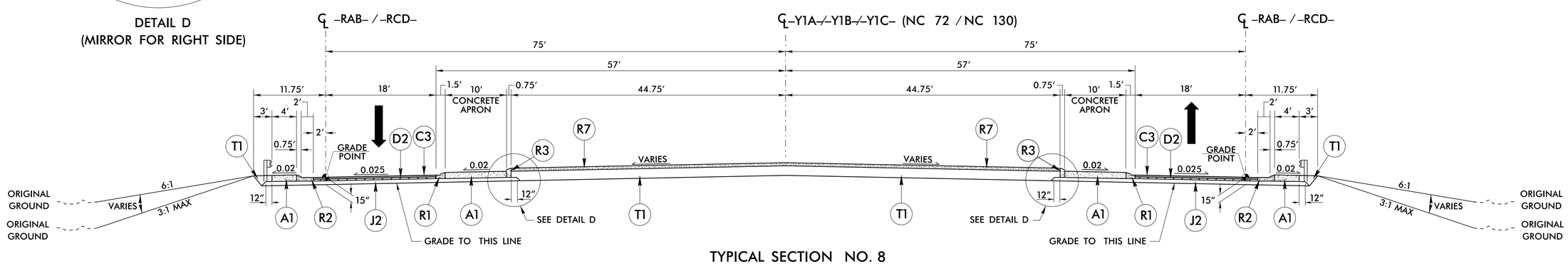

TYPICAL SECTION NO. 8

–RAB– STA. 10+00.00 TO –RAB– STA. 14+71.22
–RCD– STA. 10+00.00 TO –RCD– STA. 14+71.23

6/2/99
03-JAN-2023 13:24
R:\Roadway\Proj\R5751_Rdy_typ.dgn
$$$$USERNAME$$$$