DocuSign Envelope ID: A3C538CA-354D-4907-8983-76A6B3E6F1B0

09/08/99

TIP PROJECT: B-3186 /B-5898

CONTRACT:

STATE OF NORTH CAROLINA
DIVISION OF HIGHWAYS

PLAN FOR PROPOSED HIGHWAY EROSION CONTROL

HAYWOOD COUNTY

LOCATION: US 23/US 74/US 19 (GREAT SMOKEY MOUNTAIN HWY) FROM WEST OF NC 209(CRABTREE RD.) TO EAST OF RUSS AVE.

TYPE OF WORK: GRADING, DRAINAGE, PAVING, STRUCTURES AND UTILITIES.

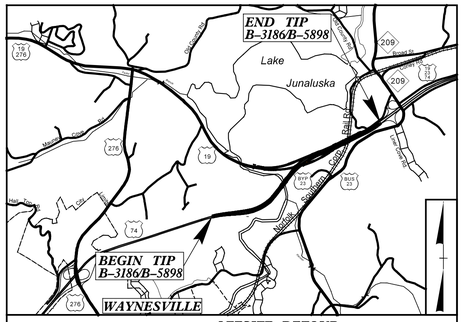

VICINITY MAP

STATE	STATE PROJECT REFERENCE NO.	SHEET NO.	TOTAL SHEETS
N.C.	B-3186, B-5898	EC-1	

STATE PROJ. NO.	F. A. PROJ. NO.	DESCRIPTION
38332.1.FS.1 (B-3186)	BRNHP-0023(32)	P.E.
48030.1.FS.1 (B-5898)	BRSTP-0019(49)	P.E.
38332.2.1 (B-3186)	BRNHP-0023(32)	RW/UTILITY
48030.2.1 (B-5898)	BRSTP-0019(49)	RW/UTILITY
38332.3.1 (B-3186)	BRNHP-0023(32)	CONST.
48030.3.1 (B-5898)	BRSTP-0019(49)	CONST.

EROSION AND SEDIMENT CONTROL MEASURES

Std. #	Description	Symbol
1630.03	Temporary Silt Ditch	TSD
1630.05	Temporary Diversion	TD
1605.01	Temporary Silt Fence	
1606.01	Special Sediment Control Fence	
1622.01	Temporary Berms and Slope Drains	
1630.02	Silt Basin Type B	
1633.01	Temporary Rock Silt Check Type-A	
	Temporary Rock Silt Check Type-A with Matting and Polyacrylamide (PAM)	
1633.02	Temporary Rock Silt Check Type-B	
	Wattle / Coir Fiber Wattle	EW CFW
	Wattle / Coir Fiber Wattle with Polyacrylamide (PAM)	
1634.01	Temporary Rock Sediment Dam Type-A	
1634.02	Temporary Rock Sediment Dam Type-B	
1635.01	Rock Pipe Inlet Sediment Trap Type-A	
1635.02	Rock Pipe Inlet Sediment Trap Type-B	
1630.04	Stilling Basin	
1630.06	Special Stilling Basin	
	Rock Inlet Sediment Trap:	
1632.01	Type A	A
1632.02	Type B	B
1632.03	Type C	C
	Clean Water Diversion	CWD
	Skimmer Basin	
	Tiered Skimmer Basin	
	Stilling Basin	
	Earthen Dam with Skimmer	

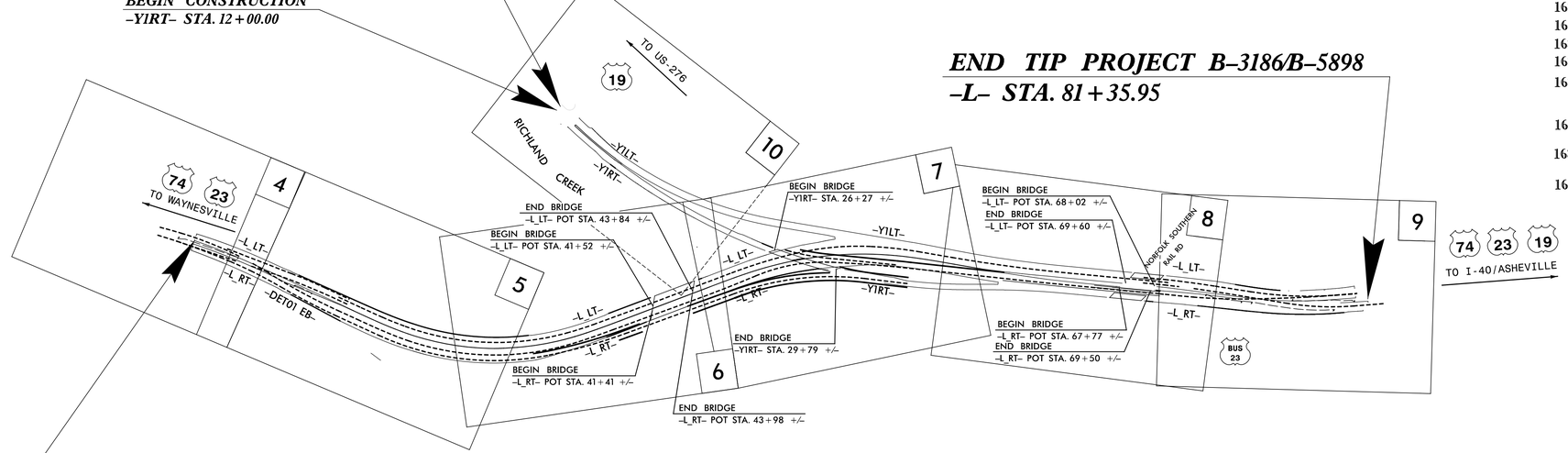

THIS PROJECT CONTAINS EROSION CONTROL PLANS FOR CLEARING AND GRUBBING PHASE OF CONSTRUCTION.

GRAPHIC SCALE

0 50

PLANS

THESE EROSION AND SEDIMENT CONTROL PLANS COMPLY WITH THE APPLICABLE REGULATIONS SET FORTH BY THE NCG-010000 GENERAL CONSTRUCTION PERMIT EFFECTIVE APRIL 1, 2019 AND ISSUED BY THE NORTH CAROLINA DEPARTMENT OF ENVIRONMENTAL QUALITY DIVISION OF WATER RESOURCES.

HDR Engineering, Inc. of the Carolinas
555 Fayetteville St, Suite 900 Raleigh, N.C. 27601
N.C.B.E.L.S. License Number: F-0116

Prepared in the Office of:

HDR Engineering, Inc. of the Carolinas
555 Fayetteville St, Suite 900 Raleigh, N.C. 27601
N.C.B.E.L.S. License Number: F-0116

2018 STANDARD SPECIFICATIONS

Designed by:

Molly Diehl, EI	*4113*
NAME	*LEVEL III CERTIFICATION NO.*

Roadway Standard Drawings

The following roadway english standards as appear in "Roadway Standard Drawings"– Roadway Design Unit – N. C. Department of Transportation – Raleigh, N. C., dated January 2018 and the latest revison thereto are applicable to this project and by reference hereby are considered a part of these plans.

1604.01	Railroad Erosion Control Detail	1632.01	Rock Inlet Sediment Trap Type A
1605.01	Temporary Silt Fence	1632.02	Rock Inlet Sediment Trap Type B
1606.01	Special Sediment Control Fence	1632.03	Rock Inlet Sediment Trap Type C
1607.01	Gravel Construction Entrance	1633.01	Temporary Rock Silt Check Type A
1622.01	Temporary Berms and Slope Drains	1633.02	Temporary Rock Silt Check Type B
1630.01	Riser Basin	1634.01	Temporary Rock Sediment Dam Type A
1630.02	Silt Basin Type B	1634.02	Temporary Rock Sediment Dam Type B
1630.03	Temporary Silt Ditch	1635.01	Rock Pipe Inlet Sediment Trap Type A
1630.04	Stilling Basin	1635.02	Rock Pipe Inlet Sediment Trap Type B
1630.05	Temporary Diversion	1640.01	Coir Fiber Baffle
1630.06	Special Stilling Basin	1645.01	Temporary Stream Crossing
1631.01	Matting Installation		

PLOT DRIVER: Hydro_color_pdf.pltcfg PENTABLE: NCDOT_TSH.tbl
USER: MDIEHL DATE: 1/13/2022 TIME: 12:09:06 PM
FILE: NCDOT\NCDOT-B3186_T02.c_\6.0_CAD_BIM\6.2_Work_In_Progress\B-3186-B-5898\Erosion Control\B3186-B5898_EC_TSH.dgn

DocuSign Envelope ID: A3C538CA-354D-4907-8983-76A6B3E6F1B0

PROJECT REFERENCE NO.	SHEET NO.
B-3186 /B-5898	EC-2
R/W SHEET NO.	
ROADWAY DESIGN ENGINEER	HYDRAULICS ENGINEER

SKIMMER BASIN WITH BAFFLES DETAIL

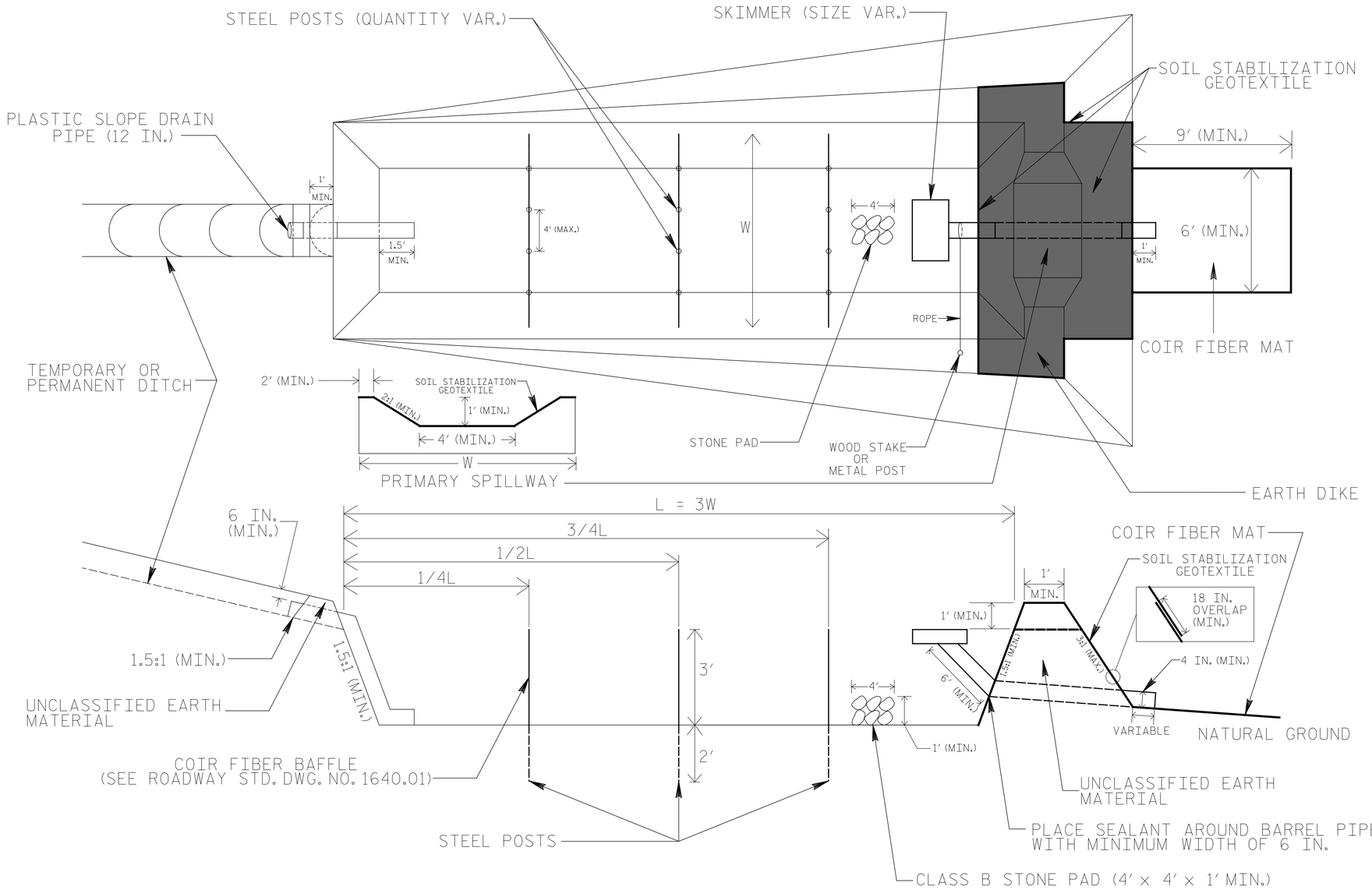

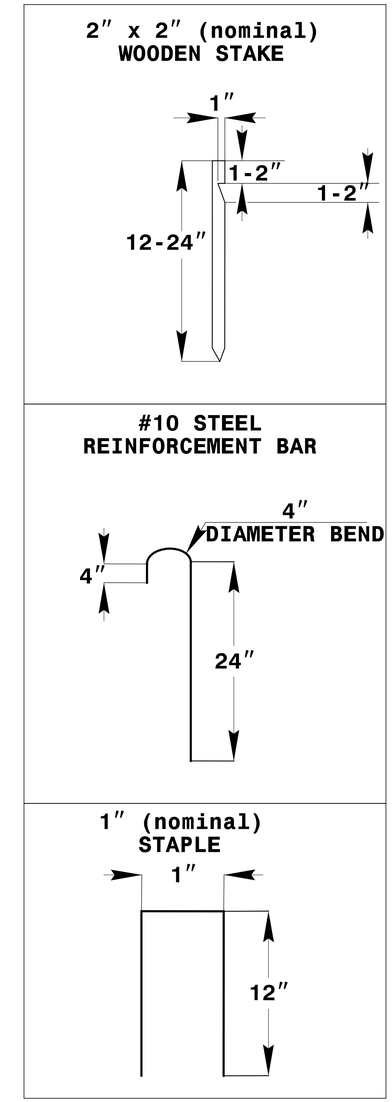

COIR FIBER MAT ANCHOR OPTIONS

NOTES

1. SEED AND PLACE MATTING FOR EROSION CONTROL ON INTERIOR AND EXTERIOR SIDESLOPES.
2. LIMIT EARTH DIKE HEIGHT TO 5 FT.
3. FOR BASIN DEPTH OF 3 FT., THE MINIMUM BASIN WIDTH SHALL BE 9 FT.
4. DETERMINE PRIMARY SPILLWAY WEIR LENGTH (FT.) USING Q/0.4, WHERE Q IS FLOW RATE (CFS) INTO BASIN.
5. PLASTIC SLOPE DRAIN PIPE AT INLET OF BASIN MAY BE REPLACED BY FILTRATION GEOTEXTILE OR TARP AS DIRECTED.
6. SOIL STABILIZATION GEOTEXTILE FOR PRIMARY SPILLWAY SHALL BE ONE CONTINUOUS PIECE OF MATERIAL OR OVERLAPPED 18 IN. (MIN.).

NOT TO SCALE

DocuSign Envelope ID: A3C538CA-354D-4907-8983-76A6B3E6F1B0

PROJECT REFERENCE NO.	SHEET NO.
B-3186 /B-5898	EC-2A
R/W SHEET NO.	
ROADWAY DESIGN ENGINEER	HYDRAULICS ENGINEER

TIERED SKIMMER BASIN DETAIL

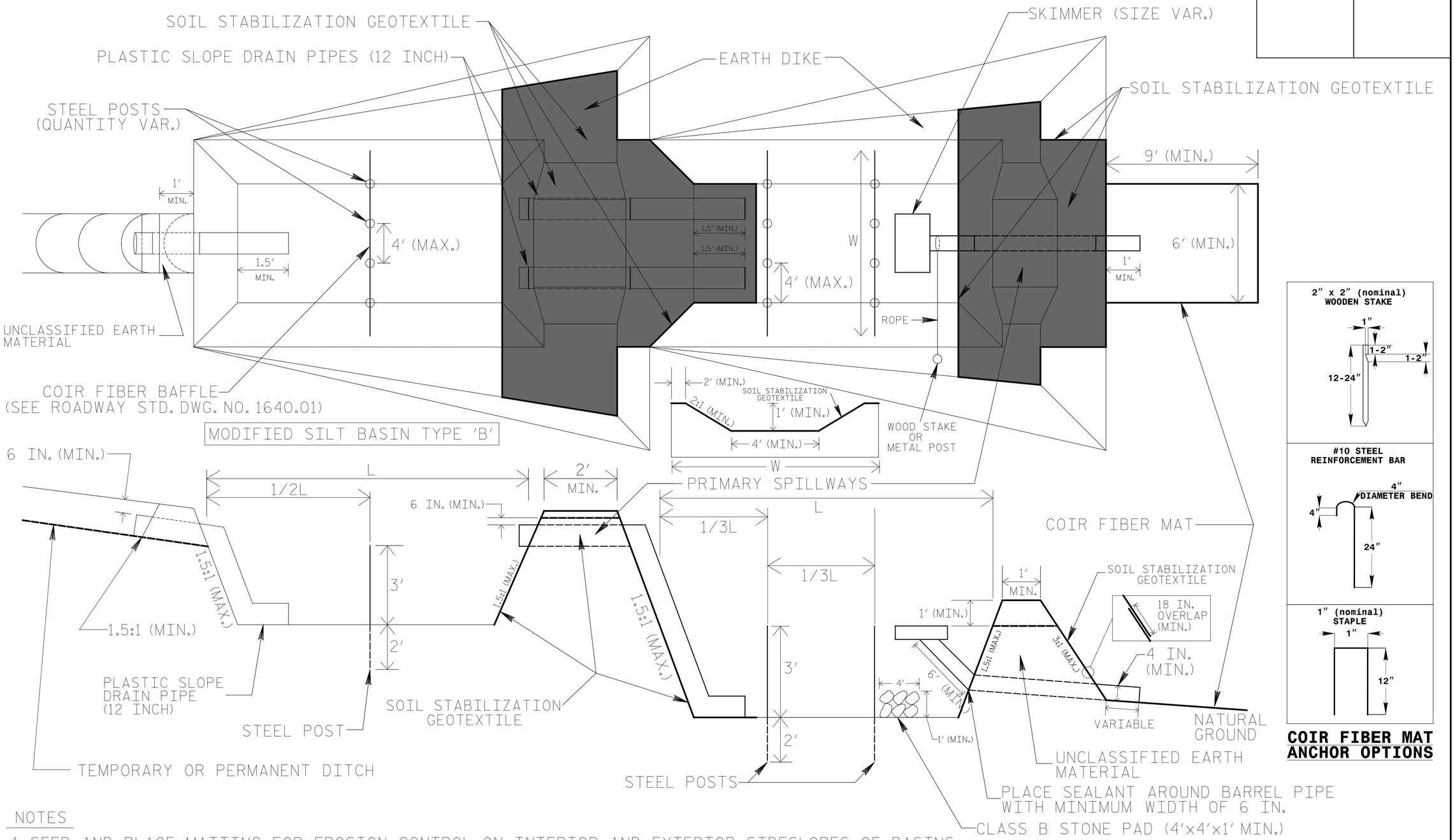

COIR FIBER MAT ANCHOR OPTIONS

NOTES

1. SEED AND PLACE MATTING FOR EROSION CONTROL ON INTERIOR AND EXTERIOR SIDESLOPES OF BASINS.
2. LIMIT HEIGHT OF EARTH DIKES TO 5 FT.
3. ADDITIONAL MODIFIED SILT BASINS TYPE 'B' MAY BE NEEDED DEPENDING ON SLOPE.
4. FOR BASIN DEPTHS OF 3FT., THE MINIMUM BASIN WIDTHS SHALL BE 9 FT.
5. DETERMINE PRIMARY SPILLWAY LENGTHS (FT.) USING Q/0.4, WHERE Q IS FLOW RATE (CFS) INTO UPPER BASIN.
6. SOIL STABILIZATION GEOTEXTILE FOR PRIMARY SPILLWAYS SHALL BE ONE CONTINUOUS PIECE OF MATERIAL OR OVERLAPPED 18 IN. (MIN.).

NOT TO SCALE

DocuSign Envelope ID: A3C538CA-354D-4907-8983-76A6B3E6F1B0

PROJECT REFERENCE NO.	SHEET NO.
B-3186 /B-5898	EC-2B
R/W SHEET NO.	
ROADWAY DESIGN ENGINEER	HYDRAULICS ENGINEER

HDR Engineering, Inc. of the Carolinas
555 Fayetteville St, Suite 900 Raleigh, N.C. 27601
N.C.B.E.L.S. License Number: F-0116

TEMPORARY ROCK SILT CHECK TYPE 'A' WITH EXCELSIOR MATTING AND POLYACRYLAMIDE (PAM)

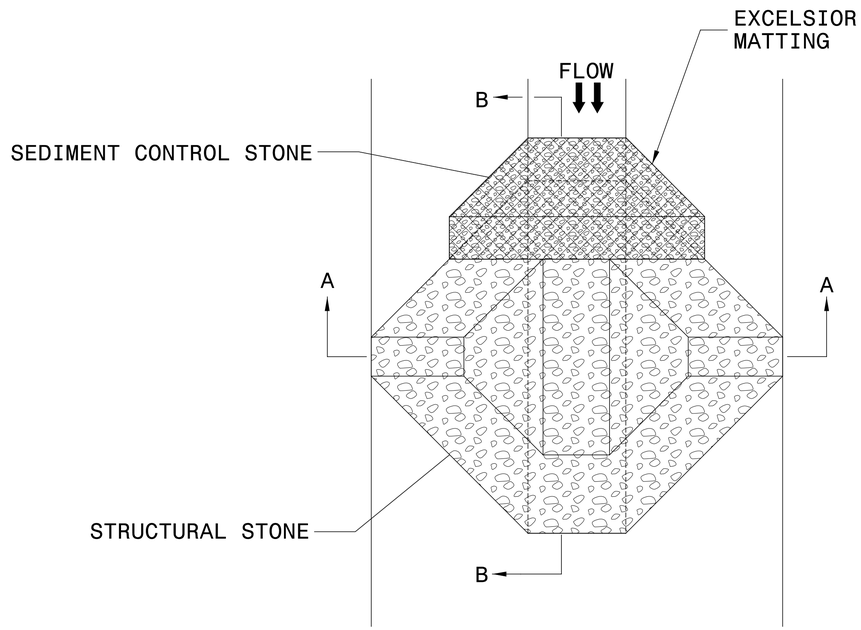

PLAN

NOTES:

INSTALL TEMPORARY ROCK SILT CHECK TYPE A IN ACCORDANCE WITH ROADWAY STANDARD DRAWING NO. 1633.01.

USE EXCELSIOR FOR MATTING MATERIAL AND ANCHOR MATTING SECTION AT TOP AND BOTTOM WITH CLASS B STONE.

PRIOR TO POLYACRYLAMIDE (PAM) APPLICATION, OBTAIN A SOIL SAMPLE FROM PROJECT LOCATION, AND FROM OFFSITE MATERIAL, AND ANALYZE FOR APPROPRIATE PAM FLOCCULANT TO BE APPLIED TO EACH ROCK SILT CHECK.

INITIALLY APPLY 4 OUNCES OF POLYACRYLAMIDE (PAM) TO TOP OF MATTING SECTION AND AFTER EVERY RAINFALL EVENT THAT EQUALS OR EXCEEDS 0.50 INCHES.

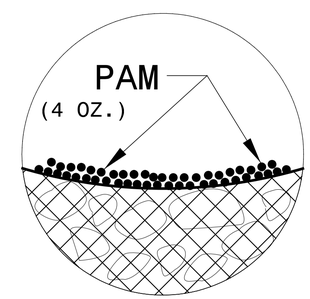

INSET A

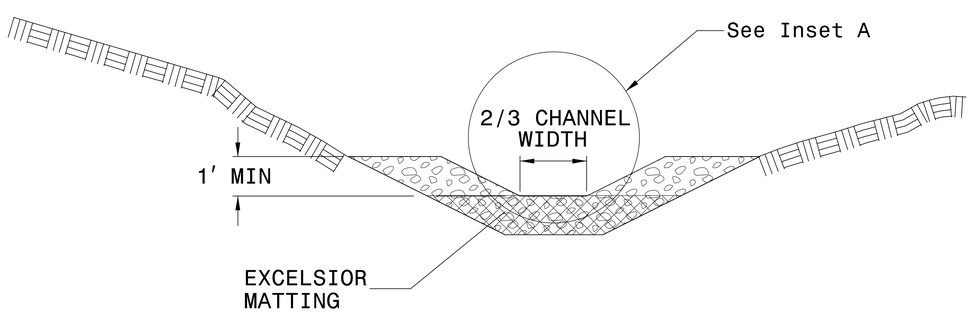

SECTION A-A

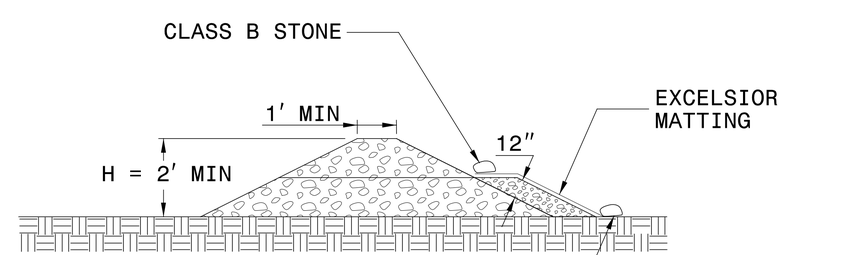

SECTION B-B

NOT TO SCALE

PLOT DRIVER: Hydro_color_pdf.pltcfg
USER: MDIEHL
FILE: \
DATE: 10/7/2021
PENTABLE: NCDOT_TSH.tbl
TIME: 12:26:23 PM

DocuSign Envelope ID: A3C538CA-354D-4907-8983-76A6B3E6F1B0

PROJECT REFERENCE NO.	SHEET NO.
B-3186 /B-5898	EC-2C
R/W SHEET NO.	
ROADWAY DESIGN ENGINEER	HYDRAULICS ENGINEER

WATTLE WITH POLYACRYLAMIDE (PAM) DETAIL

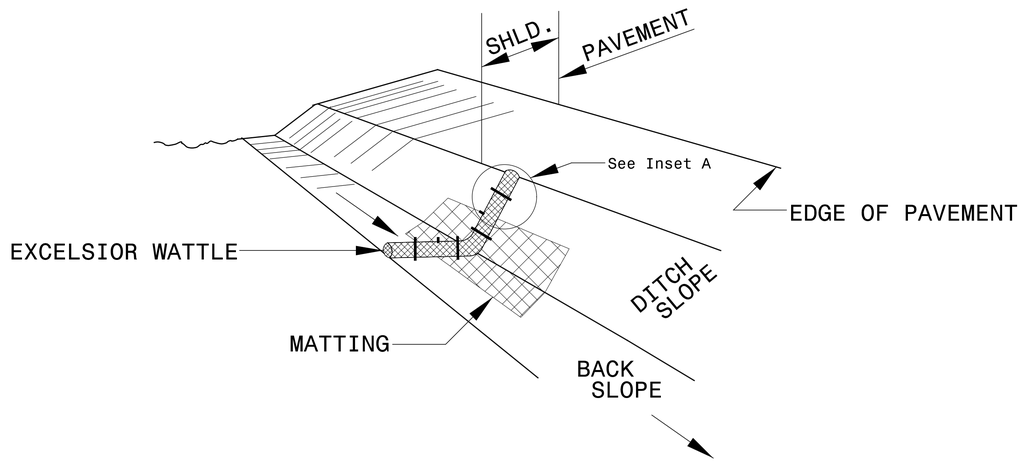

ISOMETRIC VIEW

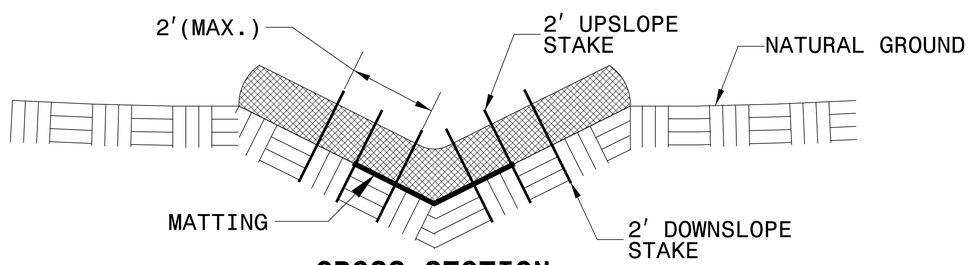

CROSS SECTION VEE DITCH

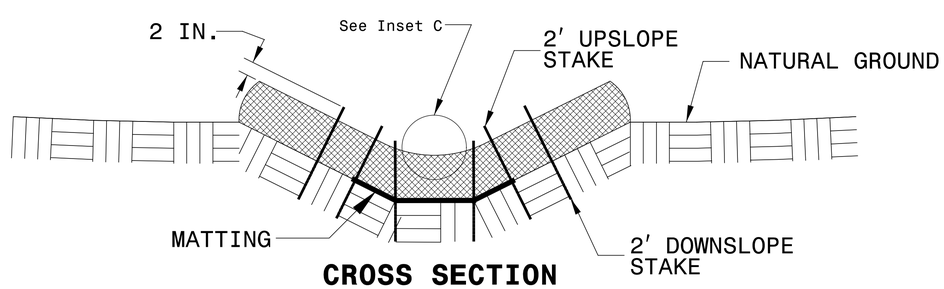

CROSS SECTION TRAPEZOIDAL DITCH

NOTES:

USE MINIMUM 12 IN. DIAMETER EXCELSIOR WATTLE.

USE 2 FT. WOODEN STAKES WITH A 2 IN. BY 2 IN. NOMINAL CROSS SECTION.

ONLY INSTALL WATTLE(S) TO A HEIGHT IN DITCH SO FLOW WILL NOT WASH AROUND WATTLE AND SCOUR DITCH SLOPES AND AS DIRECTED.

INSTALL A MINIMUM OF 2 UPSLOPE STAKES AND 4 DOWNSLOPE STAKES AT AN ANGLE TO WEDGE WATTLE TO BOTTOM OF DITCH.

PROVIDE STAPLES MADE OF 0.125 IN. DIAMETER STEEL WIRE FORMED INTO A U SHAPE NOT LESS THAN 12" IN LENGTH.

INSTALL STAPLES APPROXIMATELY EVERY 1 LINEAR FOOT ON BOTH SIDES OF WATTLE AND AT EACH END TO SECURE IT TO THE SOIL.

INSTALL MATTING IN ACCORDANCE WITH SECTION 1631 OF THE STANDARD SPECIFICATIONS.

PRIOR TO POLYACRYLAMIDE (PAM) APPLICATION, OBTAIN A SOIL SAMPLE FROM PROJECT LOCATION, AND FROM OFFSITE MATERIAL, AND ANALYZE FOR APPROPRIATE PAM FLOCCULANT TO BE APPLIED TO EACH WATTLE.

INITIALLY APPLY 2 OUNCES OF ANIONIC OR NEUTRALLY CHARGED PAM OVER WATTLE WHERE WATER WILL FLOW AND 1 OUNCE OF PAM ON MATTING ON EACH SIDE OF WATTLE. REAPPLY PAM AFTER EVERY RAINFALL EVENT THAT IS EQUAL TO OR EXCEEDS 0.50 IN.

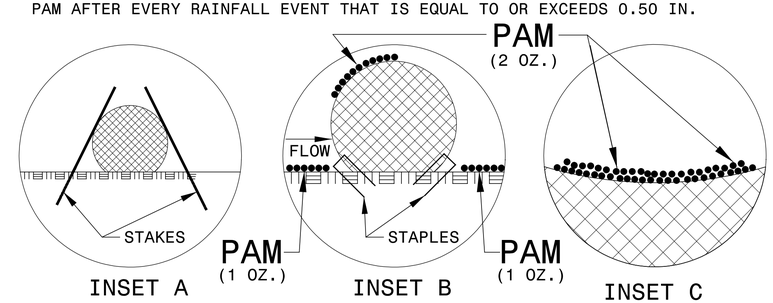

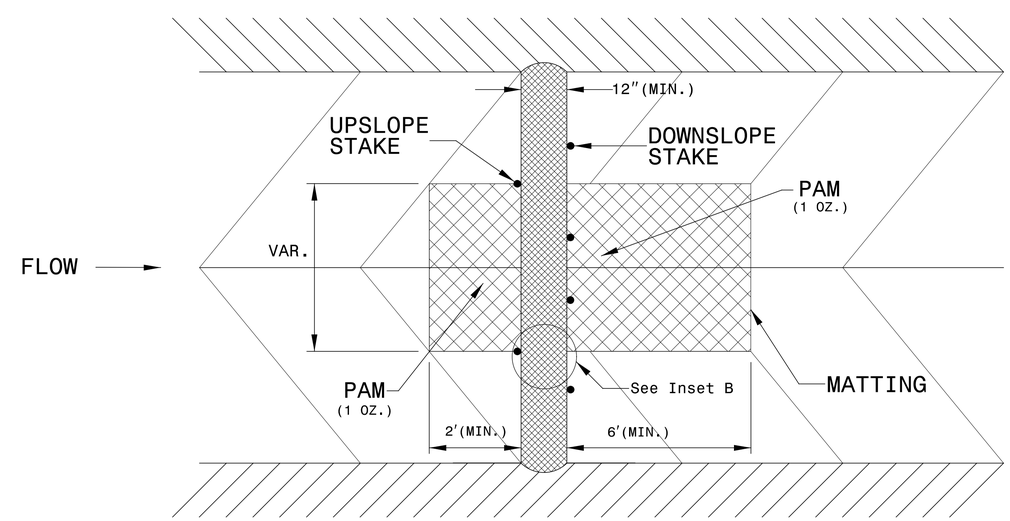

TOP VIEW

DocuSign Envelope ID: A3C538CA-354D-4907-8983-76A6B3E6F1B0

PROJECT REFERENCE NO.	SHEET NO.
B-3186 /B-5898	EC-2D
R/W SHEET NO.	
ROADWAY DESIGN ENGINEER	HYDRAULICS ENGINEER

COIR FIBER WATTLE WITH POLYACRYLAMIDE (PAM) DETAIL

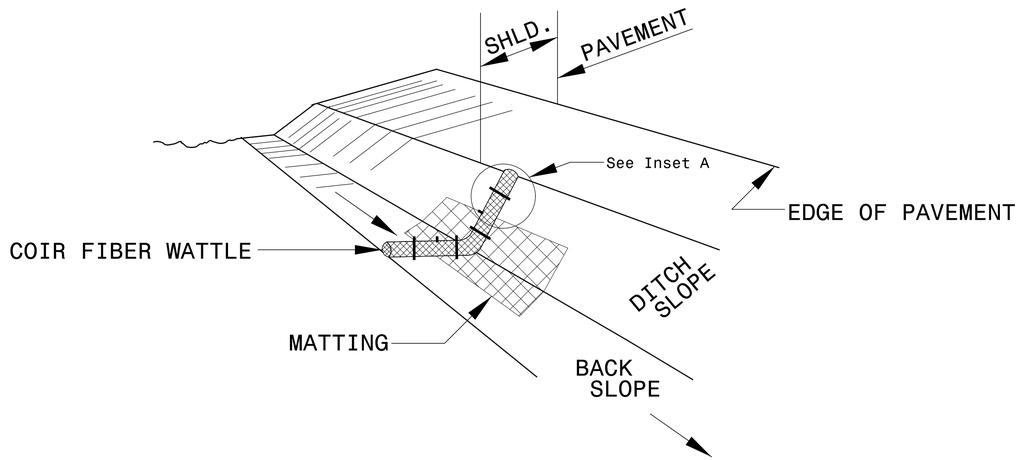

ISOMETRIC VIEW

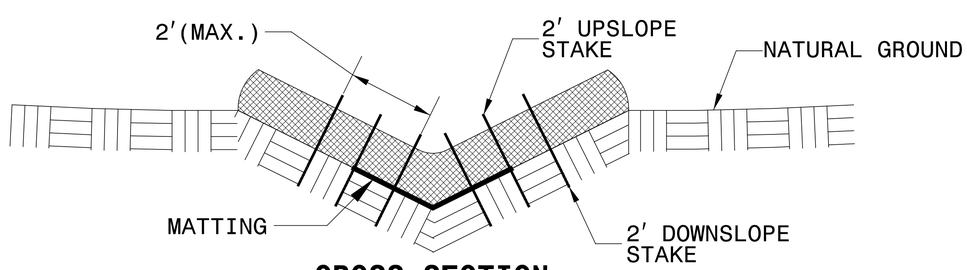

CROSS SECTION VEE DITCH

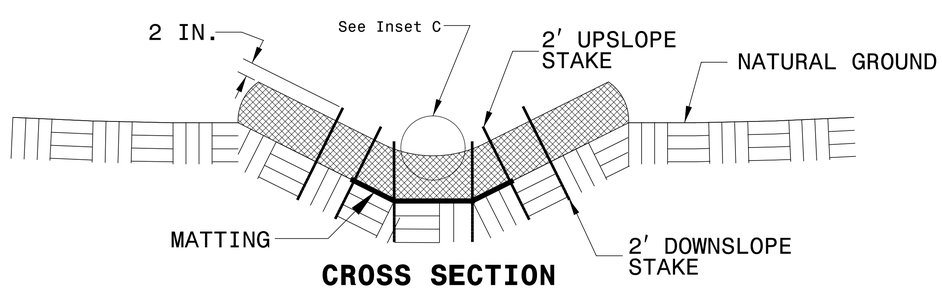

CROSS SECTION TRAPEZOIDAL DITCH

NOTES:

USE MINIMUM 12 IN. DIAMETER COIR FIBER (COCONUT FIBER) WATTLE.

USE 2 FT. WOODEN STAKES WITH A 2 IN. BY 2 IN. NOMINAL CROSS SECTION.

ONLY INSTALL WATTLE(S) TO A HEIGHT IN DITCH SO FLOW WILL NOT WASH AROUND WATTLE AND SCOUR DITCH SLOPES AND AS DIRECTED.

INSTALL A MINIMUM OF 2 UPSLOPE STAKES AND 4 DOWNSLOPE STAKES AT AN ANGLE TO WEDGE WATTLE TO BOTTOM OF DITCH.

PROVIDE STAPLES MADE OF 0.125 IN. DIAMETER STEEL WIRE FORMED INTO A U SHAPE NOT LESS THAN 12″ IN LENGTH.

INSTALL STAPLES APPROXIMATELY EVERY 1 LINEAR FOOT ON BOTH SIDES OF WATTLE AND AT EACH END TO SECURE IT TO THE SOIL.

INSTALL MATTING IN ACCORDANCE WITH SECTION 1631 OF THE STANDARD SPECIFICATIONS.

PRIOR TO POLYACRYLAMIDE (PAM) APPLICATION, OBTAIN A SOIL SAMPLE FROM PROJECT LOCATION, AND FROM OFFSITE MATERIAL, AND ANALYZE FOR APPROPRIATE PAM FLOCCULANT TO BE APPLIED TO EACH WATTLE.

INITIALLY APPLY 2 OUNCES OF ANIONIC OR NEUTRALLY CHARGED PAM OVER WATTLE WHERE WATER WILL FLOW AND 1 OUNCE OF PAM ON MATTING ON EACH SIDE OF WATTLE. REAPPLY PAM AFTER EVERY RAINFALL EVENT THAT IS EQUAL TO OR EXCEEDS 0.50 IN.

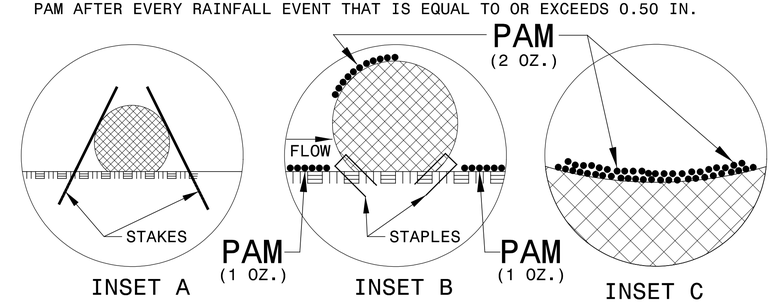

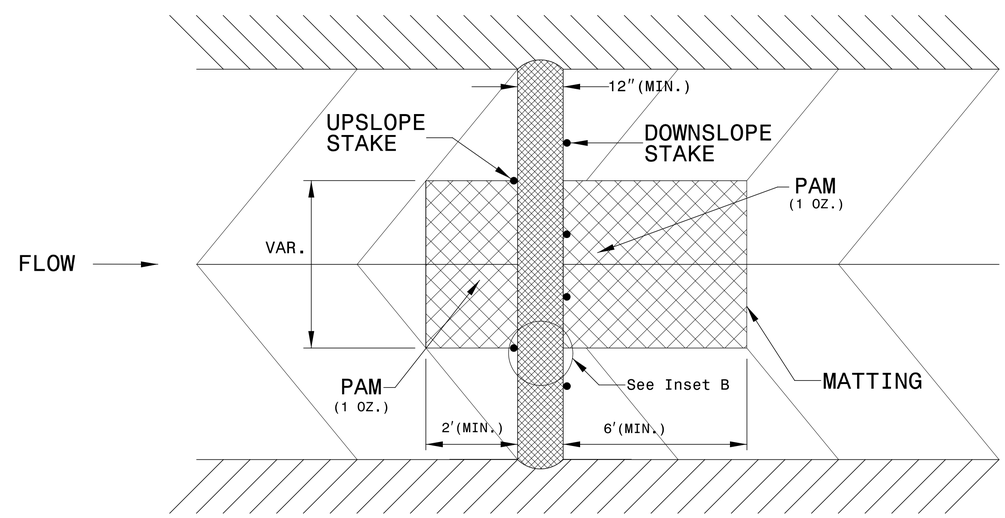

TOP VIEW

DocuSign Envelope ID: A3C538CA-354D-4907-8983-76A6B3E6F1B0

PROJECT REFERENCE NO.	SHEET NO.
B–3186 /B–5898	EC–2E
R/W SHEET NO.	
ROADWAY DESIGN ENGINEER	HYDRAULICS ENGINEER

HDR Engineering, Inc. of the Carolinas
555 Fayetteville St, Suite 900 Raleigh, N.C. 27601
N.C.B.E.L.S. License Number: F-0116

PUMP–AROUND OPERATION

NOTES:
1) All excavation shall be performed in only dry or isolated areas of the work zone.
2) Impervious dikes are to be used to isolate work from stream flow when necessary.
3) Maintenance of stream flow operations shall be incidental to the work. This includes polyethylene sheeting, diversion pipes, pumps and hoses.
4) Pumps and hoses shall be of sufficient size to dewater the work area.

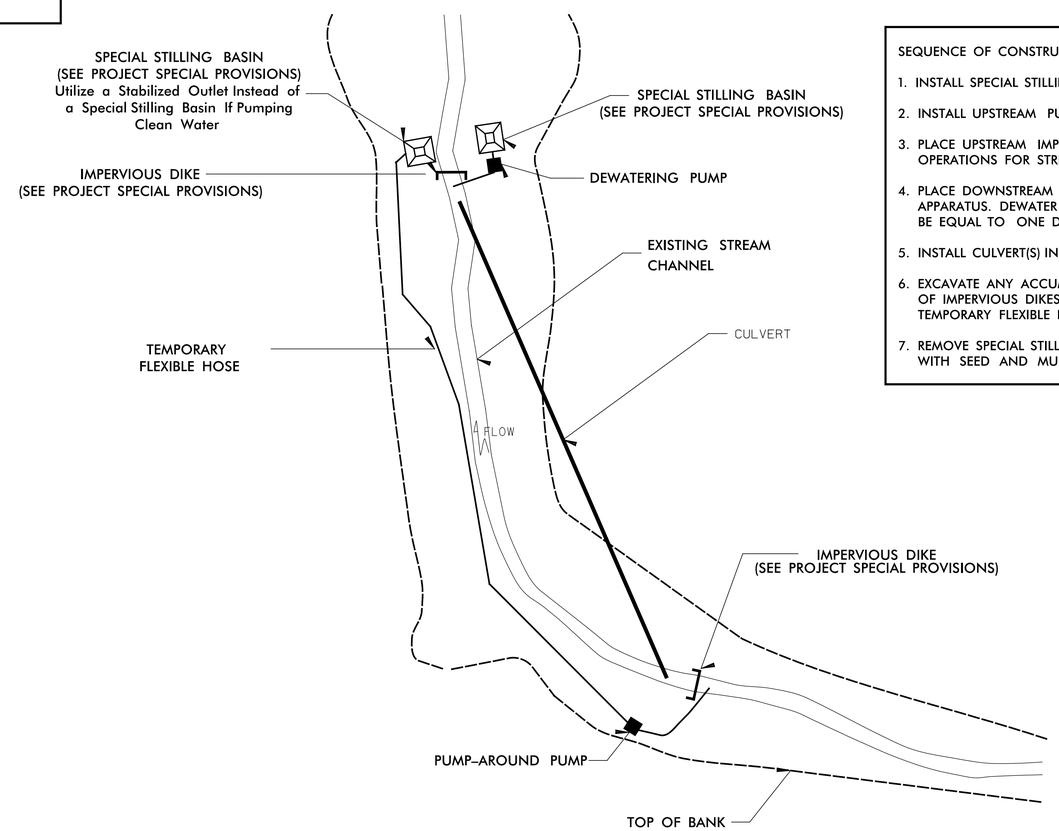

SEQUENCE OF CONSTRUCTION FOR TYPICAL WORK AREA

1. INSTALL SPECIAL STILLING BASIN(S).
2. INSTALL UPSTREAM PUMP AND TEMPORARY FLEXIBLE HOSE.
3. PLACE UPSTREAM IMPERVIOUS DIKE AND BEGIN PUMPING OPERATIONS FOR STREAM DIVERSION.
4. PLACE DOWNSTREAM IMPERVIOUS DIKE AND PUMPING APPARATUS. DEWATER ENTRAPPED AREA. AREA TO BE DEWATERED SHALL BE EQUAL TO ONE DAY'S WORK.
5. INSTALL CULVERT(S) IN ACCORDANCE WITH THE PLANS.
6. EXCAVATE ANY ACCUMULATED SILT AND DEWATER BEFORE REMOVAL OF IMPERVIOUS DIKES. REMOVE IMPERVIOUS DIKES, PUMPS, AND TEMPORARY FLEXIBLE HOSE. (DOWNSTREAM IMPERVIOUS DIKES FIRST).
7. REMOVE SPECIAL STILLING BASIN(S) AND BACKFILL. STABILIZE DISTURBED AREA WITH SEED AND MULCH.

PLOT DRIVER: Hydro_color_pdf.pltcfg
USER: MDIEHL
FILE: \
DATE: 10/7/2021
PENTABLE: NCDOT_TSH.tbl
TIME: 12:26:26 PM

DocuSign Envelope ID: A3C538CA-354D-4907-8983-76A6B3E6F1B0

PROJECT REFERENCE NO.	SHEET NO.
B-3186 /B-5898	EC-3
	ROADWAY DESIGN ENGINEER

DIVISION OF HIGHWAYS
STATE OF NORTH CAROLINA

HDR Engineering, Inc. of the Carolinas
555 Fayetteville St, Suite 900 Raleigh, N.C. 27601
N.C.B.E.L.S. License Number: F-0116

SOIL STABILIZATION SUMMARY SHEET

MATTING IN DITCHES

CONST SHEET NO.	LINE	FROM STATION	TO STATION	SIDE	ESTIMATE (SY)
4	-L-	15+50	18+50	RT	340
5	-L-	19+50	20+50	LT	115
5	-L-	18+50	21+50	RT	340
6	-L-	34+50	36+36	LT	210
6	-L-	36+36	38+45	LT	150
6	-L-	38+45	39+00	LT	55
6	-L-	44+37	45+00	LT	45
6	-L-	45+00	45+45	LT	35
7	-L-	45+75	47+00	LT	145
7	-L-	48+64	52+42	LT	755
7	-Y1RT-	24+00	25+50	LT	125
7	-Y1RT-	31+13	31+61	LT	40
7	-Y1RT-	32+08	32+56	LT	65
7	-Y1RT-	32+56	34+04	LT	170
7	-Y1RT-	34+04	37+08	LT	375
7	-Y1RT-	37+08	38+59	LT	235
8	-L-	69+56	72+00	RT	215
8	-Y1RT-	35+12	36+13	RT	75
9	-L-	73+20	74+80	M	115
9	-L-	76+00	77+37	RT	65
9	-L-	77+37	80+00	RT	130
9	-L-	79+86	81+25	M	175
10	-Y1RT-	19+08	21+21	LT	290
10	-Y1RT-	21+21	24+00	LT	375
			SUBTOTAL		4640

MATTING FOR SLOPE

CONST SHEET NO.	LINE	FROM STATION	TO STATION	SIDE	ESTIMATE (SY)
4	-L-	18+50	19+00	LT	183
5	-L-	19+00	24+75	LT	2000
5	-L-	20+25	22+20	RT	845
6	-L-	35+50	40+75	RT	2468
6	-L-	39+00	42+00	LT	842
7	-L-	45+50	53+00	RT	2598
7	-L-	53+00	53+50	RT	130
7	-Y1LT-	23+50	25+50	LT	486
7	-Y1LT-	24+50	26+50	LT	1217
7	-Y1RT-	30+65	33+50	LT	1288
20-4	-DET01*EB-	36+50	39+50	RT	1276
			SUBTOTAL		13333
		DITCH	SUBTOTAL		4640
		MISC.	MATTING		116827
			TOTAL		134800
			SAY		135000
	COIR FIBER MATTING				
6	-L-	42+95	43+89	RT	200
6	-L-	43+89	46+50	RT	540
7	-L-	46+50	52+87	RT	1300
7	-L-	52+87	53+61	RT	160
7	-L-	53+61	54+55	RT	130
	FOR BRIDGE EXCAVATION				670
	ADDITIONAL COIR FIBER MATTING				3100
			TOTAL		6100
			SAY		6100

REVISIONS

8/17/99

PLOT DRIVER: hydro_color_pdf.pltcfg
USER: MDIEHL
FILE: \
DATE: 10/7/2021
PENTABLE: NCDOT_TSH.tbl
TIME: 12:26:28 PM

DocuSign Envelope ID: A3C538CA-354D-4907-8983-76A6B3E6F1B0

8/17/99

PROJECT REFERENCE NO.	SHEET NO.
B-3186 /B-5898	EC-3A
	ROADWAY DESIGN ENGINEER

HDR Engineering, Inc. of the Carolinas
555 Fayetteville St, Suite 900 Raleigh, N.C. 27601
N.C.B.E.L.S. License Number: F-0116

DIVISION OF HIGHWAYS
STATE OF NORTH CAROLINA

SOIL STABILIZATION TIMEFRAMES

SITE DESCRIPTION	STABILIZATION TIME	TIMEFRAME EXCEPTIONS
PERIMETER DIKES, SWALES, DITCHES AND SLOPES	7 DAYS	NONE
HIGH QUALITY WATER (HQW) ZONES	7 DAYS	NONE
SLOPES STEEPER THAN 3:1	7 DAYS	IF SLOPES ARE 10' OR LESS IN LENGTH AND ARE NOT STEEPER THAN 2:1, 14 DAYS ARE ALLOWED.
SLOPES 3:1 OR FLATTER	14 DAYS	7 DAYS FOR SLOPES GREATER THAN 50' IN LENGTH.
ALL OTHER AREAS WITH SLOPES FLATTER THAN 4:1	14 DAYS	NONE, EXCEPT FOR PERIMETERS AND HQW ZONES.

REVISIONS

PLOT DRIVER: Hydro_color_pdf.pltcfg PENTABLE: NCDOT_TSH.tbl
USER: MDIEHL DATE: 10/7/2021 TIME: 12:26:29 PM
FILE: \

DocuSign Envelope ID: A3C538CA-354D-4907-8983-76A6B3E6F1B0

PROJECT REFERENCE NO.	SHEET NO.
B-3186 / B-5898	EC-4/Const. 4
R/W SHEET NO.	
ROADWAY DESIGN ENGINEER	HYDRAULICS ENGINEER

HDR Engineering, Inc. of the Carolinas
555 Fayetteville St, Suite 900 Raleigh, N.C. 27601
N.C.B.E.L.S. License Number: F-0116

CLEARING AND GRUBBING
EROSION CONTROL FOR
CONSTRUCTION SHEET 4

NOTE:
PLACE TEMPORARY ROCK SEDIMENT DAMS TYPE – B AND TEMPORARY ROCK SILT CHECKS TYPE – A AT DRAINAGE OUTLETS.

ROCK PLATING STATION RANGES:
STA 15+30.00 RT -L- FILL 1.5:1
STA 14+90.00 RT -L- FILL 1.5:1
STA 15+70.00 RT -L- CUT 2:1
STA 16+00.00 RT -L- CUT 1.33:1
STA 16+00.00 RT -L- CUT 1.5:1
STA 18+00.00 LT -L- FILL 1.5:1
STA 18+25.00 LT -L- FILL 2:1
STA 15+00.00 LT -L- FILL 1.5:1

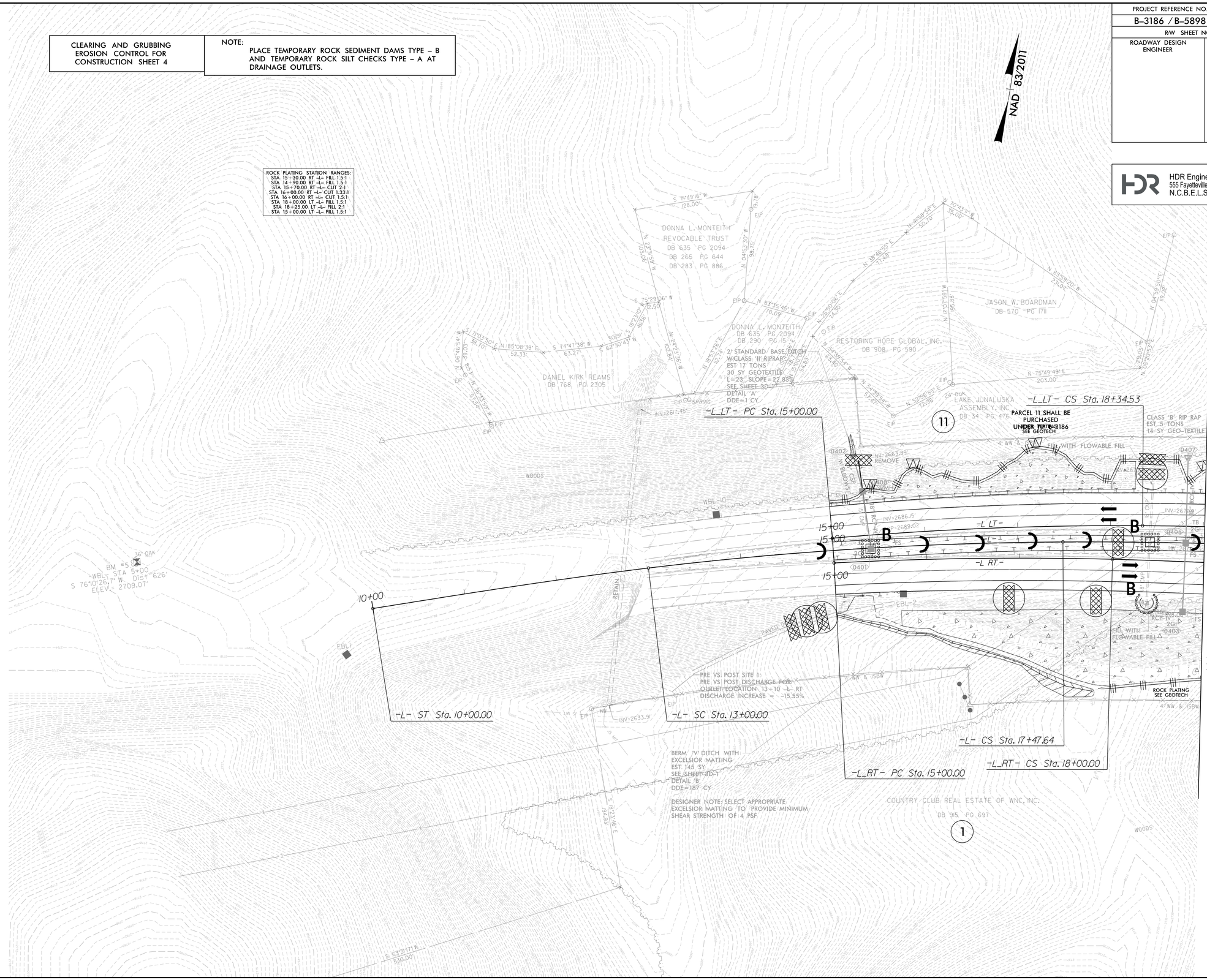

REVISIONS
RIGHT-OF-WAY REVISION 11-9-2021 : ADDED PARCEL 11 FOR LAKE JUNALUSKA ASSEMBLY ADDED NOTE FOR TIP ACQUISITION

PLOT DRIVER: NCDOT_pdf_color_eng_100.plt PENTABLE: NCDOT_EC_C&G BW.tbl
USER: WYELVERT DATE: 11/30/2021 TIME: 9:46:31 AM
FILE: NCDOT\NCDOT-B3186_T02_c_\6.0_CAD_BIM\6.2_Work_In_Progress\B-3186-B-5898\Erosion Control\B3186-B5898_HYD_EC_PSH_CG.dgn

DocuSign Envelope ID: A3C538CA-354D-4907-8983-76A6B3E6F1B0

PROJECT REFERENCE NO.	SHEET NO.
B-3186 / B-5898	EC-5/Const. 5
R/W SHEET NO.	
ROADWAY DESIGN ENGINEER	HYDRAULICS ENGINEER

HDR Engineering, Inc. of the Carolinas
555 Fayetteville St, Suite 900 Raleigh, N.C. 27601
N.C.B.E.L.S. License Number: F-0116

CLEARING AND GRUBBING EROSION CONTROL FOR CONSTRUCTION SHEET 5

NOTE:
PLACE TEMPORARY ROCK SEDIMENT DAMS TYPE – B AND TEMPORARY ROCK SILT CHECKS TYPE – A AT DRAINAGE OUTLETS.

UTILIZE SPECIAL STILLING BASIN(S) WHERE APPLICABLE

ROCK PLATING STATION RANGES:
STA 20+00.00 RT -L- CUT 1.5:1
STA 20+25.00 RT -L- CUT 2:1
STA 22+20.00 RT -L- FILL 2:1
STA 28+79.90 RT -L- FILL 1.5:1
STA 22+70.00 RT -L- FILL 1.5:1
STA 29+00.00 RT -L- FILL 2:1
STA 26+55.00 LT -L- CUT 2:1
STA 27+85.00 LT -L- CUT 1.5:1
STA 28+10.00 LT -L- CUT 1.3:1
STA 24+75.00 LT -L- CUT 2:1
STA 25+00.00 LT -L- CUT 1.5:1
STA 26+30.00 LT -L- CUT 1.5:1
STA 26+60.00 LT -L- CUT 2:1

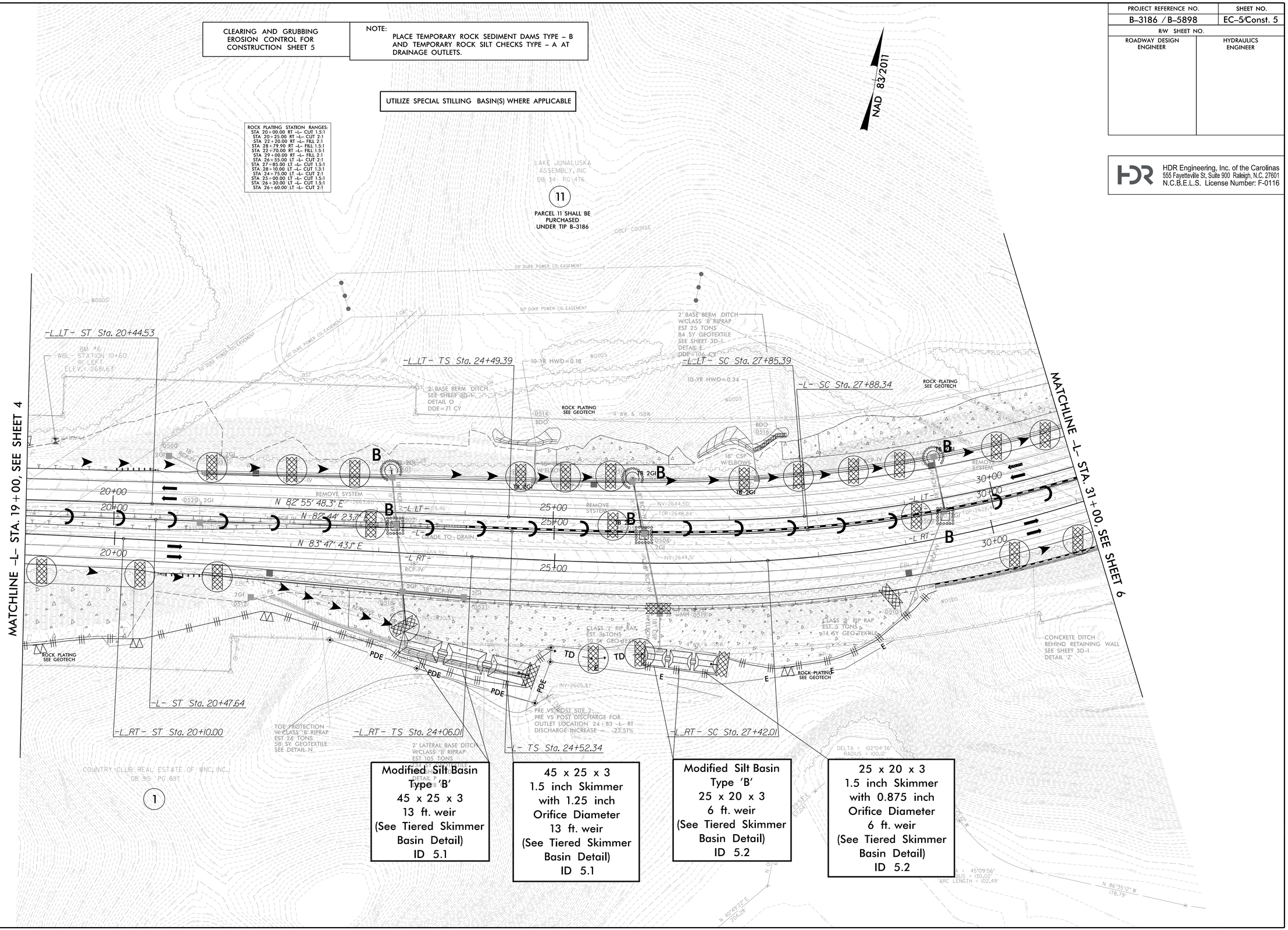

Modified Silt Basin
Type 'B'
45 x 25 x 3
13 ft. weir
(See Tiered Skimmer Basin Detail)
ID 5.1

45 x 25 x 3
1.5 inch Skimmer
with 1.25 inch
Orifice Diameter
13 ft. weir
(See Tiered Skimmer Basin Detail)
ID 5.1

Modified Silt Basin
Type 'B'
25 x 20 x 3
6 ft. weir
(See Tiered Skimmer Basin Detail)
ID 5.2

25 x 20 x 3
1.5 inch Skimmer
with 0.875 inch
Orifice Diameter
6 ft. weir
(See Tiered Skimmer Basin Detail)
ID 5.2

REVISIONS

RIGHT-OF-WAY REVISION 11-9-2021 : ADDED PARCEL 11 FOR LAKE JUNALUSKA ASSEMBLY
ADDED NOTE FOR TIP ACQUISITION

PLOT DRIVER: NCDOT_pdf_color_eng_100.plt PENTABLE: NCDOT_EC_C&G BW.tbl
USER: WYELVERT DATE: 11/30/2021 TIME: 9:47:30 AM
FILE: NCDOT\NCDOT-B3186_T02_c_\6.0_CAD_BIM\6.2_Work_In_Progress\B-3186-B-5898\Erosion Control\B3186-B5898_HYD_EC_PSH_CG.dgn

DocuSign Envelope ID: A3C538CA-354D-4907-8983-76A6B3E6F1B0

PROJECT REFERENCE NO.	SHEET NO.
B-3186 / B-5898	EC-6/Const. 6
R/W SHEET NO.	
ROADWAY DESIGN ENGINEER	HYDRAULICS ENGINEER

HDR Engineering, Inc. of the Carolinas
555 Fayetteville St, Suite 900 Raleigh, N.C. 27601
N.C.B.E.L.S. License Number: F-0116

CLEARING AND GRUBBING EROSION CONTROL FOR CONSTRUCTION SHEET 6

UTILIZE FABRIC INSERT INLET PROTECTION (HIGH FLOW) FOR DRAINAGE INLETS CLOSE TO TRAFFIC AS NEEDED

NOTE:
PLACE TEMPORARY ROCK SEDIMENT DAMS TYPE – B AND TEMPORARY ROCK SILT CHECKS TYPE – A AT DRAINAGE OUTLETS.

UTILIZE SPECIAL STILLING BASIN(S) WHERE APPLICABLE

NAD 83/2011

ROCK PLATING STATION RANGES:
STA 42+95.00 RT -L- CUT 1:1
STA 43+88.10 RT -L- FILL 1.7:1
STA 44+50.00 LT -L- FILL 2:1
STA 44+20.00 LT -L- FILL 1.5:1
STA 32+00.00 LT -L- CUT 1.5:1
STA 32+30.00 LT -L- CUT 1.2:1
STA 31+20.00 LT -L- CUT 1.3:1
STA 31+50.00 LT -L- CUT 1.5:1
STA 35+30.00 LT -L- CUT 2:1
STA 35+00.00 LT -L- CUT 1.5:1
STA 33+20.00 LT -L- CUT 1.2:1
STA 33+50.00 LT -L- CUT 1.5:1

40 x 16 x 3
1.5 inch Skimmer
with 0.875 inch
Orifice Diameter
5 ft. weir
(See Tiered Skimmer
Basin Detail)
ID 6.2

84 x 42 x 3
2 inch Skimmer
with 1.75 inch
Orifice Diameter
13 ft. weir
ID 6.1

MATCHLINE -L- STA. 31+00, SEE SHEET 5

MATCHLINE -L- STA. 45+00, SEE SHEET 7

-L_LT- CS Sta. 36+28.46
-L- CS Sta. 36+26.50
-L_RT- CS Sta. 36+07.43
-L_LT- ST Sta. 39+64.46
-L- ST Sta. 39+62.50
-L_RT- TS Sta. 44+95.45

LAKE JUNALUSKA ASSEMBLY, INC
DB 34 PG 476

11
PARCEL 11 SHALL BE PURCHASED UNDER TIP B-3186

2' LATERAL BASE DITCH W/CLASS 'II' RIPRAP
EST 23 TONS
40 SY GEOTEXTILE
SEE SHEET 3D-1
DETAIL F
DDE=69 CY

2' LATERAL BASE DITCH W/CLASS 'B' RIPRAP
EST 43 TONS
126 SY GEOTEXTILE
SEE SHEET 3D-1
DETAIL C

2' LATERAL BASE DITCH W/CLASS 'B' RIPRAP
EST 19 TONS
62 SY GEOTEXTILE
SEE SHEET 3D-1
DETAIL C

LATERAL BASE DITCH
SEE SHEET 3D-1
DETAIL F
DDE=171 CY

ROCK PLATING SEE GEOTECH

ROCK DRAIN DISSIPATOR PAD SEE SHEET 3D-1 DETAIL L

EXCAVATION LIMIT (TYP.)

DECK DRAIN DISSIPATOR PAD SEE SHEET 3D-1 DETAIL L

BEG WW FENCE

CLASS 'I' RIP RAP
EST. 3 TONS
10 SY GEO-TEXTILE

PRE VS POST SITE 39
PRE VS POST DISCHARGE FOR OUTLET LOCATION 42+94 -L- RT
DISCHARGE RISE = 0.016

ENERGY DISSIPATOR RIFFLE SEE SHEET 3D-3

STREAM STABILIZATION SEE SHEET 3D-1 DETAIL U

STREAM STABILIZATION SEE SHEET 3D-1 DETAIL T
DDE=133 CY

CLASS 'I' RIP RAP
EST. 5 TONS
14 SY GEO-TEXTILE

CONCRETE DITCH BEHIND RETAINING WALL SEE SHEET 3D-1 DETAIL 'Z'

1
COUNTRY CLUB REAL ESTATE OF WNC, INC.
DB 915 PG 697

3
STEPHEN BOXIDD
DB 511 PG 520

DAVID L HEITZ
DB 592 PG 2339

BLUE RIDGE PAPER PRODUCTS INC.
DB 472 PG 1065

DUKE ENERGY PROGRESS, INC.
DB 847 PG 1859
DB 487 PG 478

50' DUKE POWER CO. EASEMENT

RICHLAND CREEK

REVISIONS

RIGHT-OF-WAY REVISION 11-9-2021 : ADDED PARCEL 11 FOR LAKE JUNALUSKA ASSEMBLY
RIGHT-OF-WAY REVISION 11-9-2021 : ADDED NOTE FOR TIP ACQUISITION
RIGHT-OF-WAY REVISION 11-9-2021 : ELMINATED PARCEL 2

PLOT DRIVER: NCDOT_pdf_color_eng_100.plt PENTABLE: NCDOT_EC_C&G BW.tbl
USER: WYELVERT DATE: 11/30/2021 TIME: 9:56:57 AM
FILE: NCDOT\NCDOT-B3186_T02_c_\6.0_CAD_BIM\6.2_Work_In_Progress\B-3186-B-5898\Erosion Control\B3186-B5898_HYD_EC_PSH_CG.dgn

DocuSign Envelope ID: A3C538CA-354D-4907-8983-76A6B3E6F1B0

PROJECT REFERENCE NO.	SHEET NO.
B-3186 / B-5898	EC-7/Const. 7
R/W SHEET NO.	
ROADWAY DESIGN ENGINEER	HYDRAULICS ENGINEER

HDR Engineering, Inc. of the Carolinas
555 Fayetteville St, Suite 900 Raleigh, N.C. 27601
N.C.B.E.L.S. License Number: F-0116

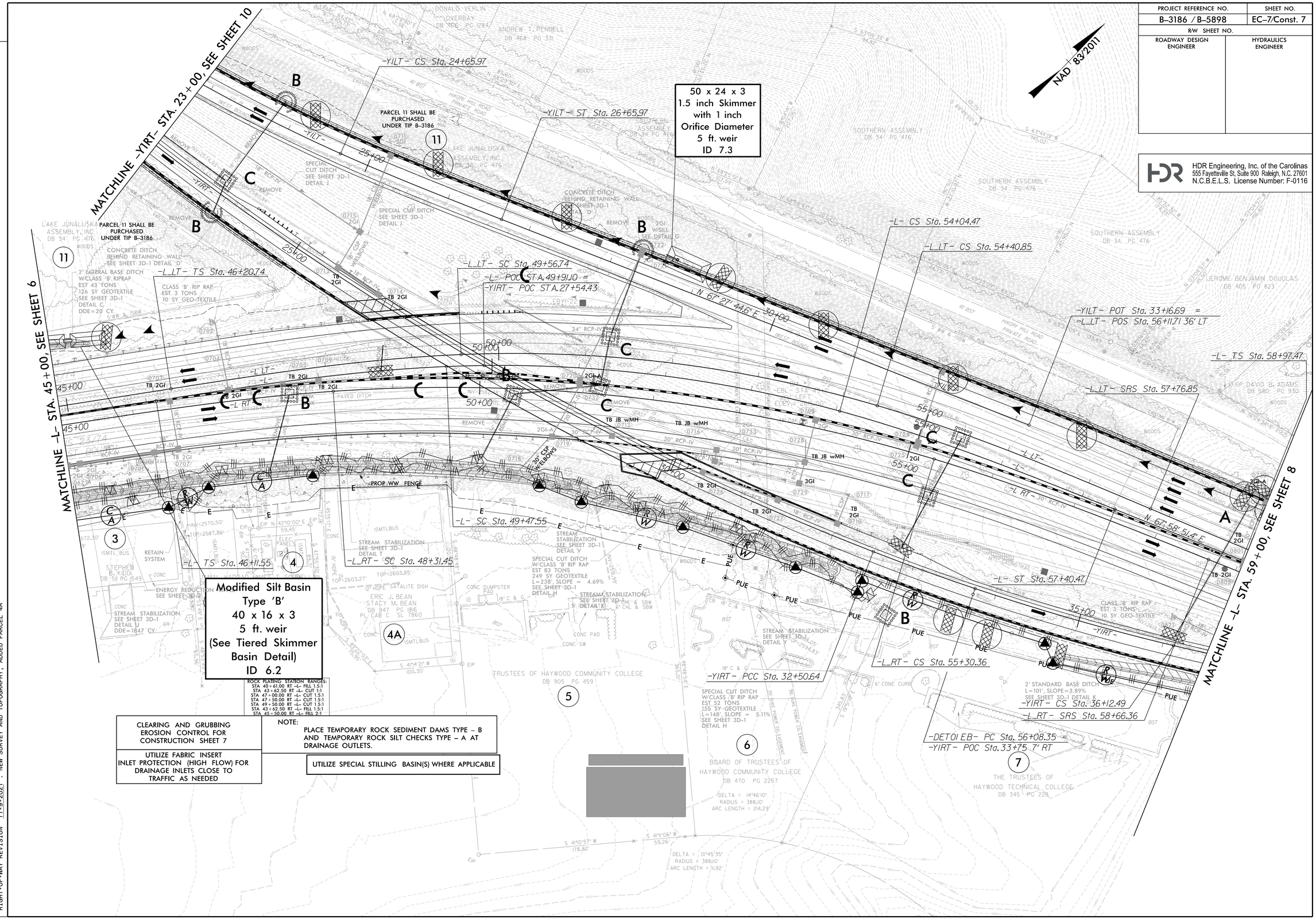
MATCHLINE -YIRT- STA. 23+00, SEE SHEET 10
MATCHLINE -L- STA. 45+00, SEE SHEET 6
MATCHLINE -L- STA. 59+00, SEE SHEET 8
NAD 83/2011
-YILT- CS Sta. 24+65.97
-YILT- ST Sta. 26+65.97
50 x 24 x 3
1.5 inch Skimmer
with 1 inch
Orifice Diameter
5 ft. weir
ID 7.3
PARCEL 11 SHALL BE PURCHASED UNDER TIP B-3186
-L- CS Sta. 54+04.47
-L_LT- CS Sta. 54+40.85
-L_LT- SC Sta. 49+56.74
-L- POC STA. 49+91.10 =
-YIRT- POC STA. 27+54.43
-L_LT- TS Sta. 46+20.74
-YILT- POT Sta. 33+16.69 =
-L_LT- POS Sta. 56+11.71 36' LT
-L- TS Sta. 58+97.47
-L_LT- SRS Sta. 57+76.85
-L- SC Sta. 49+47.55
-L- TS Sta. 46+11.55
-L_RT- SC Sta. 48+31.45
-L- ST Sta. 57+40.47
-L_RT- CS Sta. 55+30.36
-YIRT- PCC Sta. 32+50.64
-YIRT- CS Sta. 36+12.49
-L_RT- SRS Sta. 58+66.36
-DET01 EB- PC Sta. 56+08.35 =
-YIRT- POC Sta. 33+75 7' RT
Modified Silt Basin
Type 'B'
40 x 16 x 3
5 ft. weir
(See Tiered Skimmer
Basin Detail)
ID 6.2
ROCK PLATING STATION RANGES:
STA 40+61.00 RT -L- FILL 1.5:1
STA 43+62.50 RT -L- CUT 1:1
STA 47+00.00 RT -L- CUT 1.5:1
STA 47+50.00 RT -L- CUT 1.5:1
STA 49+50.00 RT -L- CUT 1.5:1
STA 43+62.50 RT -L- FILL 1.5:1
STA 45+50.00 RT -L- FILL 2:1
CLEARING AND GRUBBING
EROSION CONTROL FOR
CONSTRUCTION SHEET 7
UTILIZE FABRIC INSERT
INLET PROTECTION (HIGH FLOW) FOR
DRAINAGE INLETS CLOSE TO
TRAFFIC AS NEEDED
NOTE:
PLACE TEMPORARY ROCK SEDIMENT DAMS TYPE – B
AND TEMPORARY ROCK SILT CHECKS TYPE – A AT
DRAINAGE OUTLETS.
UTILIZE SPECIAL STILLING BASIN(S) WHERE APPLICABLE
TRUSTEES OF HAYWOOD COMMUNITY COLLEGE
DB 905 PG 459
BOARD OF TRUSTEES OF
HAYWOOD COMMUNITY COLLEGE
DB 470 PG 2267
THE TRUSTEES OF
HAYWOOD TECHNICAL COLLEGE
DB 345 PG 228
ERIC J. BEAN
STACY M. BEAN
STEPHEN B. KIDD
JEROME BENJAMIN DOUGLAS
DB 405 PG 823
EIP DAVID B. ADAMS
DB 580 PG 930
SOUTHERN ASSEMBLY
DB 34 PG 476
LAKE JUNALUSKA ASSEMBLY, INC
DB 34 PG 476
DONALD VERLIN OVERBAY
DB 466 PG 1284
ANDREW T. PENNELL
DB 468 PG 331
SPECIAL CUT DITCH
SEE SHEET 3D-1
DETAIL J
CONCRETE DITCH
BEHIND RETAINING WALL
SEE SHEET 3D-1 DETAIL D
2' LATERAL BASE DITCH
W/CLASS 'B' RIPRAP
EST 43 TONS
126 SY GEOTEXTILE
SEE SHEET 3D-1
DETAIL C
DDE=20 CY
CLASS 'B' RIP RAP
EST. 3 TONS
10 SY GEO-TEXTILE
STREAM STABILIZATION
SEE SHEET 3D-1
DETAIL T
DDE=1847 CY
SPECIAL CUT DITCH
W/CLASS 'B' RIP RAP
EST 83 TONS
249 SY GEOTEXTILE
L=238', SLOPE = 4.69%
SEE SHEET 3D-1
DETAIL H
SPECIAL CUT DITCH
W/CLASS 'B' RIP RAP
EST 52 TONS
155 SY-GEOTEXTILE
L=148', SLOPE = 5.11%
SEE SHEET 3D-1
DETAIL H
2' STANDARD BASE DITCH
L=101', SLOPE=3.89%
SEE SHEET 3D-1 DETAIL K
DELTA = 14°46'10"
RADIUS = 388.10'
ARC LENGTH = 214.29'
DELTA = 01°45'35"
RADIUS = 388.10'
ARC LENGTH = 11.92'
N 67°27'44.6" E
N 67°58'51.4" E
S 41°10'57" W
178.82'
S 41°11'06" W
59.26'
PROP WW FENCE
PUE
WOODS
EBL STA
EBL ELEV = 2587.00'
EBL ELEV = 2587.00'
EBL ELEV = 2587.00'

DocuSign Envelope ID: A3C538CA-354D-4907-8983-76A6B3E6F1B0

PROJECT REFERENCE NO.	SHEET NO.
B-3186 / B-5898	EC-8/Const. 8
R/W SHEET NO.	
ROADWAY DESIGN ENGINEER	HYDRAULICS ENGINEER

HDR Engineering, Inc. of the Carolinas
555 Fayetteville St, Suite 900 Raleigh, N.C. 27601
N.C.B.E.L.S. License Number: F-0116

ALIGNMENT -RR- BASED ON RIGHT-OF-WAY AND TRACK MAP, SOUTHERN RAILWAY COMPANY, MURPHY DIVISION, STATION 1267+20 TO 1478+40, DATED DECEMBER 31, 1927.
ALIGNMENT -RR- TIED TO FIELD SURVEY AT PC STA. 310+32.

NAD 83/2011

CLEARING AND GRUBBING
EROSION CONTROL FOR
CONSTRUCTION SHEET 8

UTILIZE FABRIC INSERT
INLET PROTECTION (HIGH FLOW) FOR
DRAINAGE INLETS CLOSE TO
TRAFFIC AS NEEDED

NOTE:
PLACE TEMPORARY ROCK SEDIMENT DAMS TYPE – B AND TEMPORARY ROCK SILT CHECKS TYPE – A AT DRAINAGE OUTLETS.

MATCHLINE –L– STA. 59+00, SEE SHEET 7

MATCHLINE –L– STA. 73+00, SEE SHEET 9

-L_LT- SC Sta. 59+02.85
-L- SC Sta. 60+97.47
-L- CS Sta. 63+82.63
-L_LT- CS Sta. 63+74.83
-L_LT- ST Sta. 65+00.83
-L- ST Sta. 65+82.63
-L- POT Sta. 68+72.05 =
-RR- POC Sta. 311+02.79
-RR- PC Sta. 1307+03.14
-RR- PT Sta. 1307+89.92
-RR- PC Sta. 1308+35.40
-L_LT- PC Sta. 70+02.65
-L- PT Sta. 72+69.17
-L- PC Sta. 69+98.45
-L_RT- PC Sta. 70+19.82
-L_RT- PT Sta. 72+90.89
-YIRT- CS Sta. 41+60.85
-L_RT- CS Sta. 65+25.52
-YIRT- ST Sta. 43+10.85
-YIRT- POT Sta. 44+31.29 =
-L_RT- ST Sta. 66+75.52
36' RT
-YIRT- SC Sta. 39+12.49
-L_RT- SC Sta. 60+16.36
-YIRT- SRS Sta. 37+62.49
-RR- PT Sta. 1312+41.12

DAVID B. ADAMS DB 580 PG 930
JANE J. YOUNG DB 467 PG 733
THUYLIEU T. NGUYEN PG 2100
RICHARD T. KERBY DB 650 PG 298
LAKE JUNALUSKA ASSEMBLY, INC DB 34 PG 476
PARCEL 11 SHALL BE PURCHASED UNDER TIP B-3186
K & HB ENTERPRISES, LLC DB 552 PG 2247
MCDILL INC. DB 406 PG 797
ALLISON OUTDOOR ADVERTISING, LTD. DB 404 PG 557
THE FIG TREE OF WNC, LLC DB 882 PG 81 DB 869 PG 480
W.D. SCHULHOFER 1996E PG 414 DB 314 PG 132
MCDILL INC. DB 351 PG 210
THE TRUSTEES OF HAYWOOD TECHNICAL COLLEGE DB 345 PG 228

PRE VS. POST SITE 6:
PRE VS. POST DISCHARGE FOR OUTLET LOCATION 71+03 -L- LT
DISCHARGE INCREASE = -0.88%

2' STANDARD BASE DITCH W/CLASS 'I' RIPRAP EST 181 TONS 243 SY GEOTEXTILE L=180', SLOPE=13.09% SEE SHEET 3D-1 DETAIL I

TOE PROTECTION W/CLASS 'B' RIPRAP EST 4 TONS 7 SY GEOTEXTILE SEE DETAIL N

CLASS 'I' RIP RAP EST. 5 TONS 14 SY GEO-TEXTILE

50-YR HWD=0.29 FILL WITH FLOWABLE FILL

CONCRETE DITCH BEHIND RETAINING WALL SEE SHEET 3D-1 DETAIL 'D'

CONCRETE DITCH BEHIND RETAINING WALL SEE SHEET 3D-1 DETAIL 'W'

+10.85 END WW FENCE TIE TO EX.

ROCK PLATING SEE GEOTECH

TRENCHLESS INSTALLATION 24" WELDED STEEL

2' STANDARD BASE DITCH W/CLASS 'B' RIPRAP EST 13 TONS 40 SY GEOTEXTILE L=39', SLOPE=16.67% SEE SHEET 3D-1 DETAIL 'S' DDE=141 CY

2' STANDARD BASE DITCH W/CLASS 'B' RIPRAP EST 33 TONS 101 SY GEOTEXTILE L=98', SLOPE=14.20% SEE SHEET 3D-1 DETAIL 'S'

ROCK PLATING STATION RANGES:
STA 70+50 RT -L- CUT 2:1
STA 71+00 RT -L- CUT 1.5:1
STA 72+10 RT -L- CUT 1.5:1
STA 73+50.00 RT -L- CUT 2:1
STA 74+30.00 RT -L- CUT 1.5:1
STA 74+50.00 RT -L- CUT 1.3:1
STA 75+00.00 RT -L- CUT 1.3:1

-RR-

PI Sta 1307+46.53
Δ = 1° 25' 14.2" (RT)
D = 1° 38' 13.3"
L = 86.78'
T = 43.39'
R = 3,500.00'

PI Sta 1310+39.71
Δ = 16° 43' 25.2" (RT)
D = 4° 07' 19.2"
L = 405.72'
T = 204.31'
R = 1,390.00'

REVISIONS

RIGHT-OF-WAY REVISION 11-8-2021 : PARCEL 11 REVISED TEMPORARY CONSTRUCTION EASEMENT
RIGHT-OF-WAY REVISION 11-9-2021 : ADDED PARCEL 11 FOR LAKE JUNALUSKA ASSEMBLY
ADDED NOTE FOR TIP ACQUISITION
RIGHT-OF-WAY REVISION 11-8-2021 : ADDED PARCEL 12

PLOT DRIVER: NCDOT_pdf_color_eng_100.plt PENTABLE: NCDOT_EC_C&G BW.tbl
USER: WYELVERT DATE: 11/30/2021 TIME: 10:05:43 AM
FILE: NCDOT\NCDOT-B3186_T02_c_\6.0_CAD_BIM\6.2_Work_In_Progress\B-3186-B-5898\Erosion Control\B3186-B5898_HYD_EC_PSH_CG.dgn

DocuSign Envelope ID: A3C538CA-354D-4907-8983-76A6B3E6F1B0

PROJECT REFERENCE NO.	SHEET NO.
B-3186 / B-5898	EC-9/Const. 9
R/W SHEET NO.	
ROADWAY DESIGN ENGINEER	HYDRAULICS ENGINEER

HDR Engineering, Inc. of the Carolinas
555 Fayetteville St, Suite 900 Raleigh, N.C. 27601
N.C.B.E.L.S. License Number: F-0116

CLEARING AND GRUBBING
EROSION CONTROL FOR
CONSTRUCTION SHEET 9

UTILIZE FABRIC INSERT
INLET PROTECTION (HIGH FLOW) FOR
DRAINAGE INLETS CLOSE TO
TRAFFIC AS NEEDED

NOTE:
PLACE TEMPORARY ROCK SEDIMENT DAMS TYPE – B
AND TEMPORARY ROCK SILT CHECKS TYPE – A AT
DRAINAGE OUTLETS.

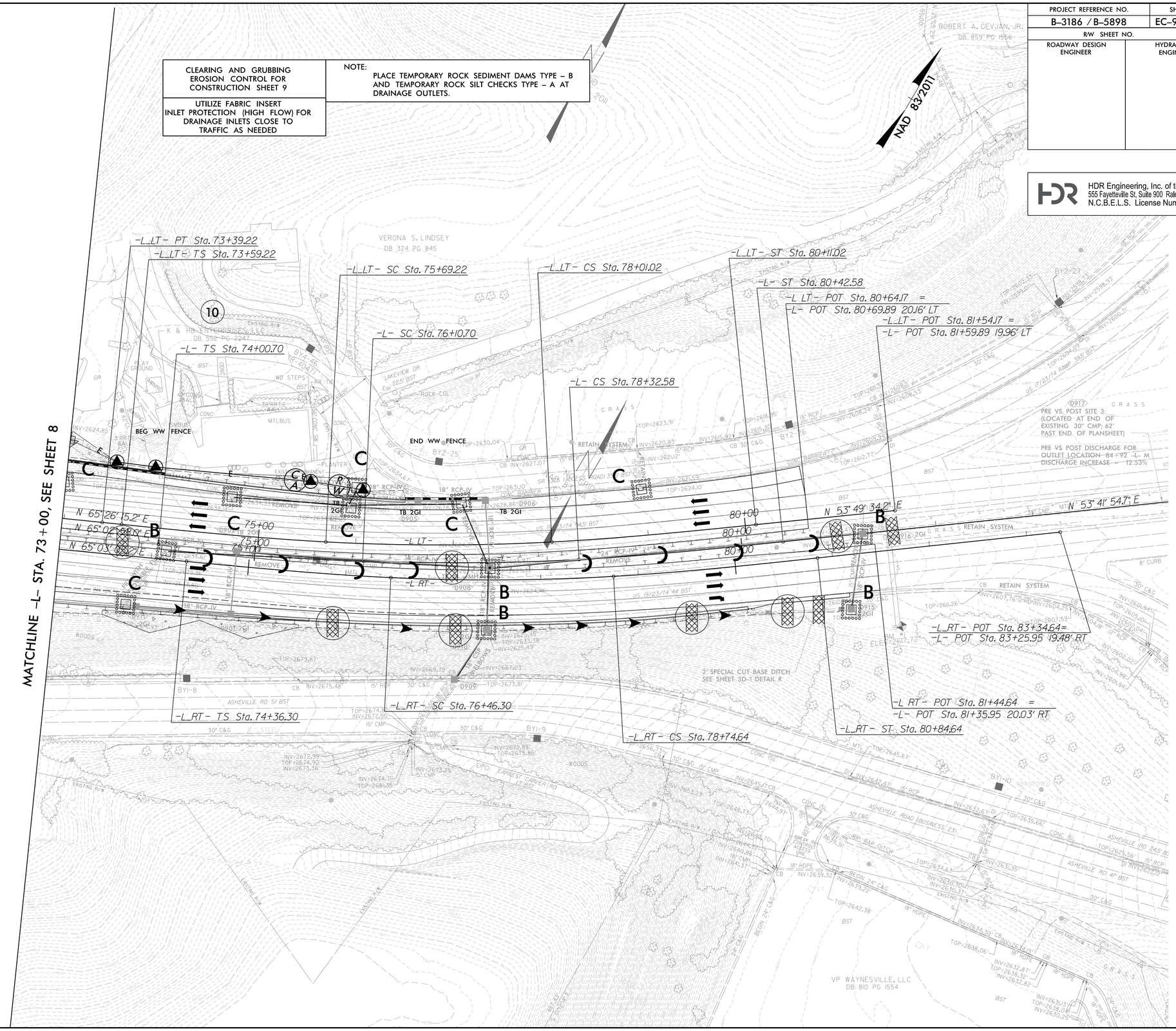

REVISIONS

RIGHT-OF-WAY REVISION 11-8-2021 : PARCEL 10 REVISED TEMPORARY CONSTRUCTION EASEMENT, PROPOSED C/A & ROW AND PROPOSED FENCE

PLOT DRIVER: NCDOT_pdf_color_eng_100.plt PENTABLE: NCDOT_EC_C&G BW.tbl
USER: WYELVERT DATE: 11/30/2021 TIME: 10:06:31 AM
FILE: NCDOT\NCDOT-B3186_T02_c_\6.0_CAD_BIM\6.2_Work_In_Progress\B-3186-B-5898\Erosion Control\B3186-B5898_HYD_EC_PSH_CG.dgn