DETAILS AND NOTES

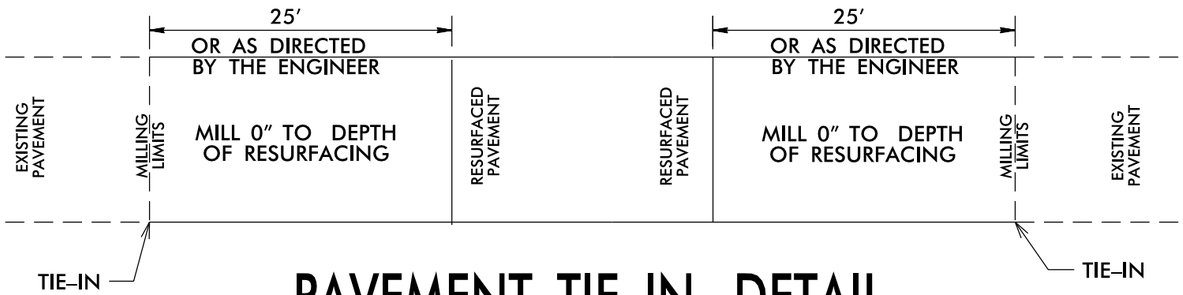

PAVEMENT TIE–IN DETAIL

** MILLING TO BE PAID FOR AS INCIDENTAL MILLING

DETAILS OF PATCHING EXISTING PAVEMENT PRIOR TO RESURFACING

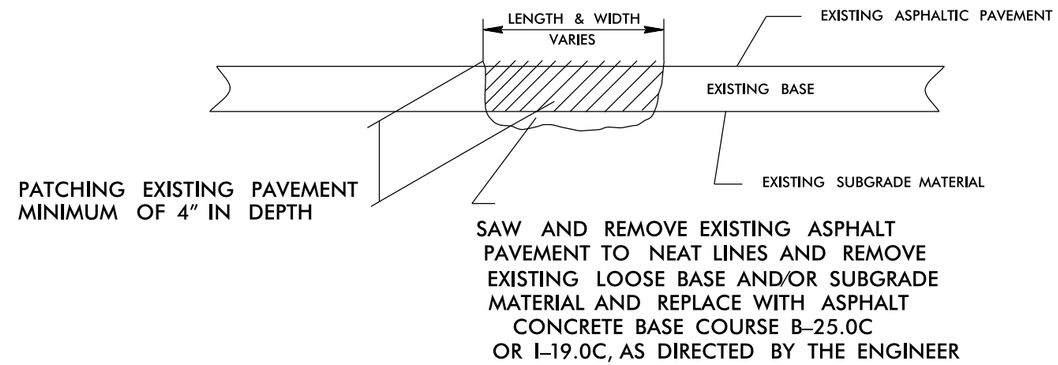

PROJECT NOTES

- STATE FORCES WILL BE HANDLING ALL SHOULDER WORK EXCEPT INCIDENTAL STONE AS DIRECTED BY THE ENGINEER.
- FINAL PAVEMENT MARKINGS TO BE HANDLED BY STATE FORCES ON MAPS 3, 8, 10, 12–17, 19, AND 20.
- PAINT AND LINE REMOVAL QUANTITIES INCLUDED ON MAP NO. 5 FOR BRIDGE DECK.
- TEMPORARY PAINT QUANTITIES INCLUDED FOR MAPS 1, 2, 5, 6, 7, 9, 11, 12, 18, AND 20 WITH MILLING.
- MAPS WITH MILLING SHOULD BE PATCHED AFTER MILLING HAS BEEN COMPLETED.

22-SEP-2021 15:39
2021-2022 Resurfacing\Moore_November-2021_Submittal\Moore_November-2021_Maps_Typ.dgn
kelts AT DIVA-304605