DocuSign Envelope ID: F22FF957-1576-4007-AB03-02E4E01EE852

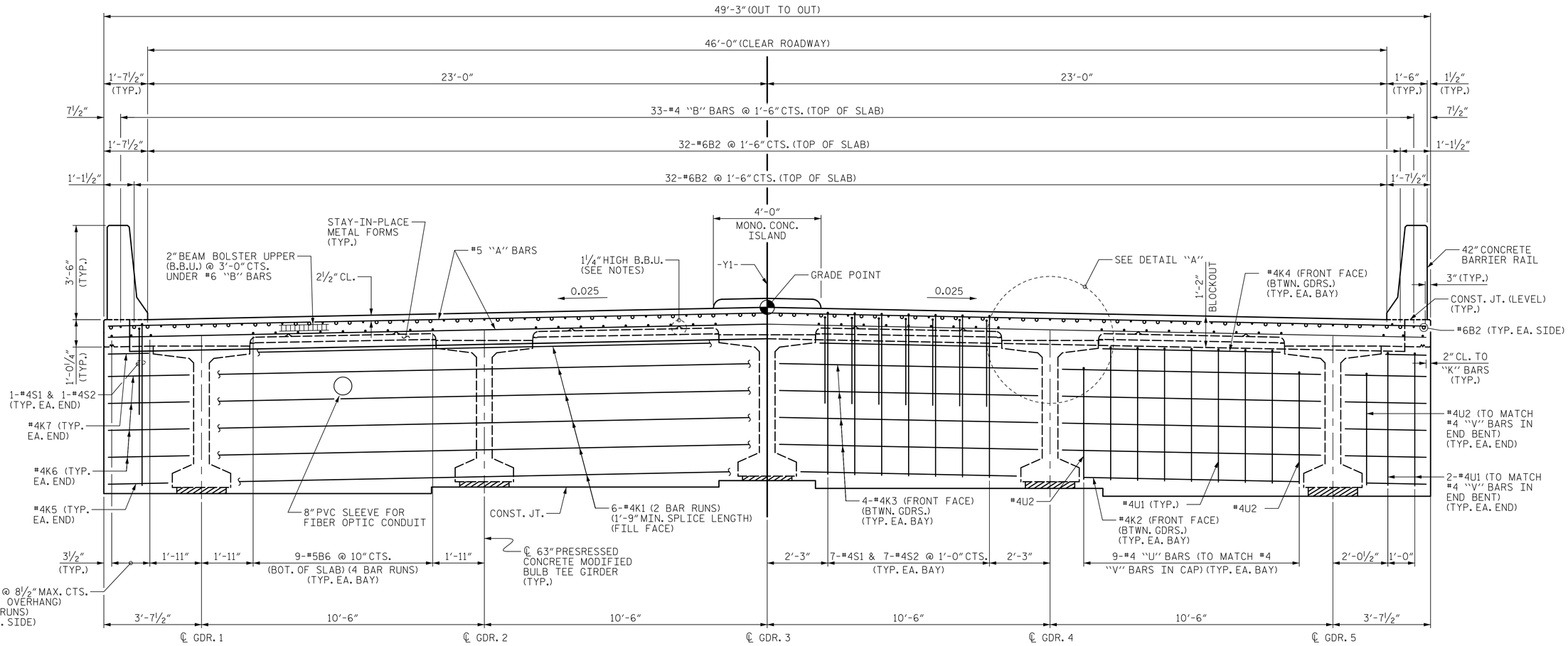

TYPICAL SECTION

(SHOWING INTEGRAL END BENT)

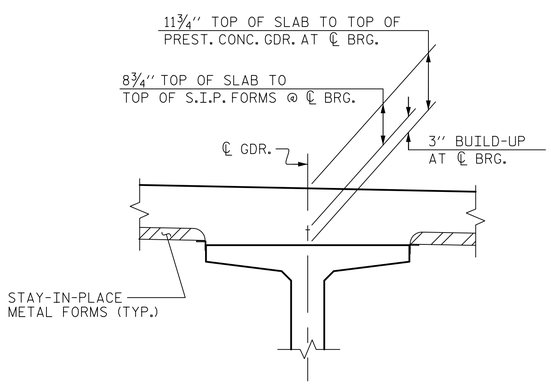

DETAIL "A"

(TYP. EA. GIRDER)

NOTES:

PROVIDE 1¼" HIGH BEAM BOLSTERS UPPER AT 4'-0" CTS. ATOP THE METAL STAY-IN-PLACE FORMS TO SUPPORT THE BOTTOM MAT OF "A" BARS. WHEN USING REMOVABLE FORMS. PROVIDE CONTINUOUS HIGH CHAIRS FOR METAL DECK (C.H.C.M) @ 4'-0" CTS. WITH A HEIGHT TO SUPPORT THE BOTTOM MAT OF "A" BARS A CLEAR DISTANCE OF 2½" ABOVE THE TOP OF THE REMOVABLE FORM.

LONGITUDINAL STEEL MAY BE SHIFTED SLIGHTLY, AS NECESSARY, TO AVOID INTERFERENCE WITH STIRRUPS IN PRESTRESSED CONCRETE GIRDERS.

PREVIOUSLY CAST CONCRETE IN A CONTINUOUS UNIT SHALL HAVE ATTAINED A MINIMUM COMPRESSIVE STRENGTH OF 3,000 PSI BEFORE ADDITIONAL CONCRETE IS CAST IN THE UNIT.

BARRIER RAIL IN A CONTINUOUS UNIT SHALL NOT BE CAST UNTIL ALL SLAB CONCRETE IN THE UNIT HAS BEEN CAST AND HAS REACHED A MINIMUM COMPRESSIVE STRENGTH OF 3,000 PSI.

FOR CONCRETE BARRIER RAIL REINFORCING AND DETAILS, SEE "CONCRETE BARRIER RAIL" SHEET.

PROJECT NO. B-5980

NASH COUNTY

STATION: 42+56.82 -Y1-

SHEET 1 OF 3

AECOM
AECOM TECHNICAL SERVICES OF NC, INC.
701 CORPORATE CENTER DRIVE, SUITE 475
RALEIGH, NC 27607
(919) 854-6200 www.aecom.com
AECOM License No. F-0342

3/15/2020
NORTH CAROLINA PROFESSIONAL SEAL 030474 ENGINEER JOHN C. MORRISON
DocuSigned by: John C. Morrison
A2FDE142C82F4AB...

STATE OF NORTH CAROLINA
DEPARTMENT OF TRANSPORTATION
RALEIGH

SUPERSTRUCTURE

TYPICAL SECTION

REVISIONS						SHEET NO.
NO.	BY:	DATE:	NO.	BY:	DATE:	S-05
1			3			TOTAL SHEETS
2			4			34

DOCUMENT NOT CONSIDERED FINAL UNLESS ALL SIGNATURES COMPLETED

DRAWN BY :	T.B. STUMP	DATE :	02/2019
CHECKED BY :	J.C. MORRISON	DATE :	02/2019
DESIGNED BY :	T.B. STUMP	DATE :	02/2019
DESIGN CHECKED BY :	J.C. MORRISON	DATE :	02/2019

DATE: 3/13/2020
TIME: 1:53:22 PM

USER: stumpf
DGN: \\saraf\STGOO\Data\Projects\6055TI16 - B-5980\500_CAD_GIS\910_CADD\70_NCDOT_TIP\Structures\04 Drawings\400_09_S05_B5980_SMI_TS.dgn