DocuSign Envelope ID: 28E2E83D-424F-4B5A-9FA6-3D802DC20173

REINFORCING BAR SCHEDULE

BAR	No.	SIZE	TYPE	LENGTH	WEIGHT	BAR	No.	SIZE	TYPE	LENGTH	WEIGHT
✳ A1	295	5	STR	38'-11"	11974	A210	2	5	STR	9'-1"	19
A2	295	5	STR	38'-11"	11974	A211	2	5	STR	9'-9"	20
✳ A3	6	6	STR	25'-0"	225	A212	2	5	STR	10'-6"	22
						A213	2	5	STR	11'-3"	23
✳ A101	2	5	STR	2'-7"	5	A214	2	5	STR	11'-11"	25
✳ A102	2	5	STR	3'-3"	7	A215	2	5	STR	12'-8"	26
✳ A103	2	5	STR	4'-0"	8	A216	2	5	STR	13'-5"	28
✳ A104	2	5	STR	4'-9"	10	A217	2	5	STR	14'-1"	29
✳ A105	2	5	STR	5'-5"	11	A218	2	5	STR	14'-10"	31
✳ A106	2	5	STR	6'-2"	13	A219	2	5	STR	15'-6"	32
✳ A107	2	5	STR	6'-11"	14	A220	2	5	STR	16'-3"	34
✳ A108	2	5	STR	7'-7"	16	A221	2	5	STR	16'-12"	35
✳ A109	2	5	STR	8'-4"	17	A222	2	5	STR	17'-8"	37
✳ A110	2	5	STR	9'-0"	19	A223	2	5	STR	18'-5"	38
✳ A111	2	5	STR	9'-9"	20	A224	2	5	STR	19'-1"	40
✳ A112	2	5	STR	10'-6"	22	A225	2	5	STR	19'-10"	41
✳ A113	2	5	STR	11'-2"	23	A226	2	5	STR	20'-7"	43
✳ A114	2	5	STR	11'-11"	25	A227	2	5	STR	21'-3"	44
✳ A115	2	5	STR	12'-7"	26	A228	2	5	STR	21'-12"	46
✳ A116	2	5	STR	13'-4"	28	A229	2	5	STR	22'-8"	47
✳ A117	2	5	STR	14'-1"	29	A230	2	5	STR	23'-5"	49
✳ A118	2	5	STR	14'-9"	31	A231	2	5	STR	24'-2"	50
✳ A119	2	5	STR	15'-6"	32	A232	2	5	STR	24'-10"	52
✳ A120	2	5	STR	16'-2"	34	A233	2	5	STR	25'-7"	53
✳ A121	2	5	STR	16'-11"	35	A234	2	5	STR	26'-4"	55
✳ A122	2	5	STR	17'-8"	37	A235	2	5	STR	27'-0"	56
✳ A123	2	5	STR	18'-4"	38	A236	2	5	STR	27'-9"	58
✳ A124	2	5	STR	19'-1"	40	A237	2	5	STR	28'-5"	59
✳ A125	2	5	STR	19'-10"	41	A238	2	5	STR	29'-2"	61
✳ A126	2	5	STR	20'-6"	43	A239	2	5	STR	29'-11"	62
✳ A127	2	5	STR	21'-3"	44	A240	2	5	STR	30'-7"	64
✳ A128	2	5	STR	21'-11"	46	A241	2	5	STR	31'-4"	65
✳ A129	2	5	STR	22'-8"	47	A242	2	5	STR	32'-0"	67
✳ A130	2	5	STR	23'-5"	49	A243	2	5	STR	32'-9"	68
✳ A131	2	5	STR	24'-1"	50	A244	2	5	STR	33'-6"	70
✳ A132	2	5	STR	24'-10"	52	A245	2	5	STR	34'-2"	71
✳ A133	2	5	STR	25'-6"	53	A246	2	5	STR	34'-11"	73
✳ A134	2	5	STR	26'-3"	55	A247	2	5	STR	35'-7"	74
✳ A135	2	5	STR	27'-0"	56	A248	2	5	STR	36'-4"	76
✳ A136	2	5	STR	27'-8"	58	A249	2	5	STR	37'-1"	77
✳ A137	2	5	STR	28'-5"	59	A250	2	5	STR	37'-9"	79
✳ A138	2	5	STR	29'-1"	61	A251	2	5	STR	38'-6"	80
✳ A139	2	5	STR	29'-10"	62						
✳ A140	2	5	STR	30'-7"	64	✳ B1	116	4	STR	35'-2"	2725
✳ A141	2	5	STR	31'-3"	65	✳ B2	58	6	STR	37'-3"	3245
✳ A142	2	5	STR	32'-0"	67	✳ B3	50	6	STR	31'-0"	2328
✳ A143	2	5	STR	32'-8"	68	B4	132	5	STR	53'-0"	7297
✳ A144	2	5	STR	33'-5"	70						
✳ A145	2	5	STR	34'-2"	71	✳ G1	2	5	STR	50'-2"	105
✳ A146	2	5	STR	34'-10"	73						
✳ A147	2	5	STR	35'-7"	74	✳ K1	8	8	4	19'-6"	417
✳ A148	2	5	STR	36'-4"	76	✳ K2	8	8	5	30'-1"	643
✳ A149	2	5	STR	37'-0"	77	K3	18	6	STR	8'-6"	230
✳ A150	2	5	STR	37'-9"	79	K4	6	4	STR	10'-4"	41
✳ A151	2	5	STR	38'-5"	80	K5	36	4	STR	12'-4"	297
						K6	6	4	STR	8'-10"	35
A201	2	5	STR	2'-7"	5	K7	12	4	2	8'-4"	67
A202	2	5	STR	3'-4"	7	K8	12	4	1	16'-7"	133
A203	2	5	STR	4'-1"	8						
A204	2	5	STR	4'-9"	10	✳ S1	54	5	7	5'-11"	333
A205	2	5	STR	5'-6"	11	✳ S2	24	5	7	3'-6"	88
A206	2	5	STR	6'-2"	13	✳ S3	54	4	3	5'-7"	201
A207	2	5	STR	6'-11"	14	S4	141	4	6	3'-5"	322
A208	2	5	STR	7'-8"	16						
A209	2	5	STR	8'-4"	17	U1	12	4	8	9'-9"	78
						U2	21	4	5	16'-6"	231

TOTAL REINFORCING STEEL LBS. 22,885
✳TOTAL EPOXY COATED REINFORCING STEEL LBS. 24,464

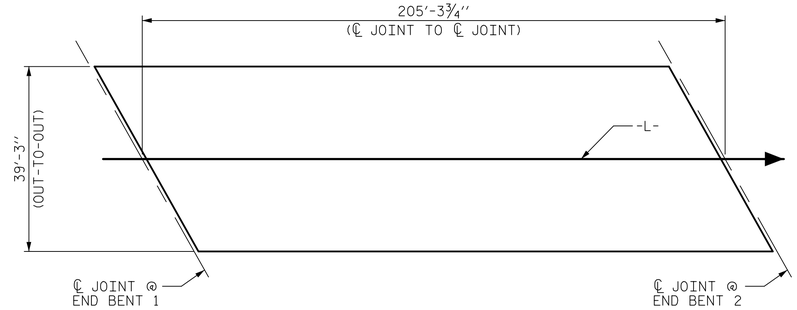

LAYOUT FOR COMPUTING AREA
REINFORCED CONCRETE DECK SLAB
(SQ. FT. = 8058)

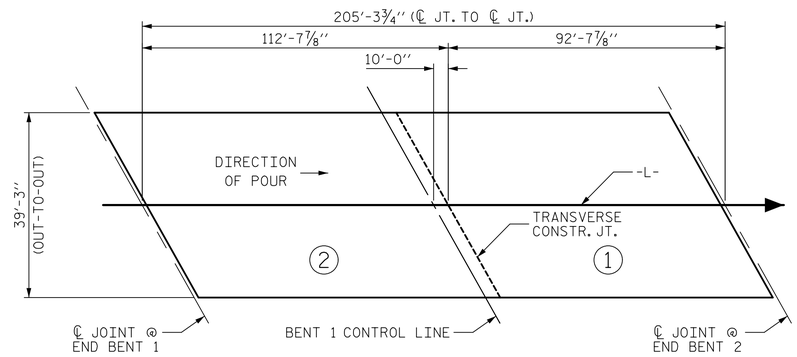

POURING SEQUENCE

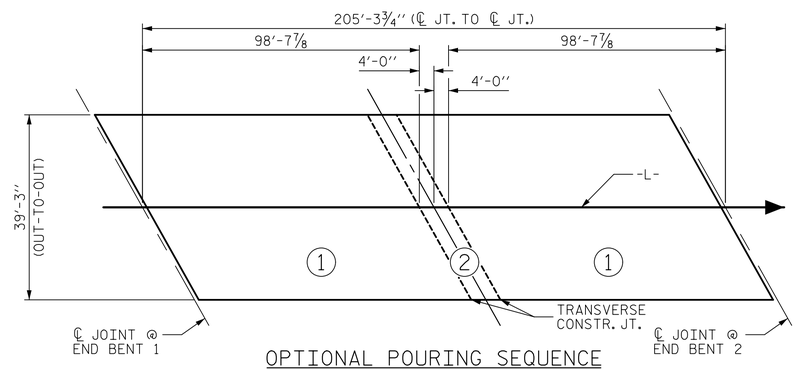

OPTIONAL POURING SEQUENCE

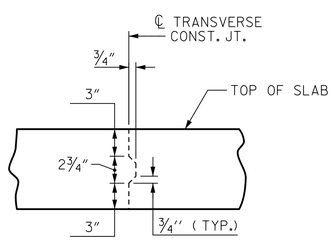

TRANSVERSE CONSTRUCTION JOINT DETAIL

NOTE: REINFORCING STEEL IN SLAB NOT SHOWN. LONGITUDINAL REINFORCING STEEL SHALL BE CONTINUOUS THRU JOINT.

BAR TYPES

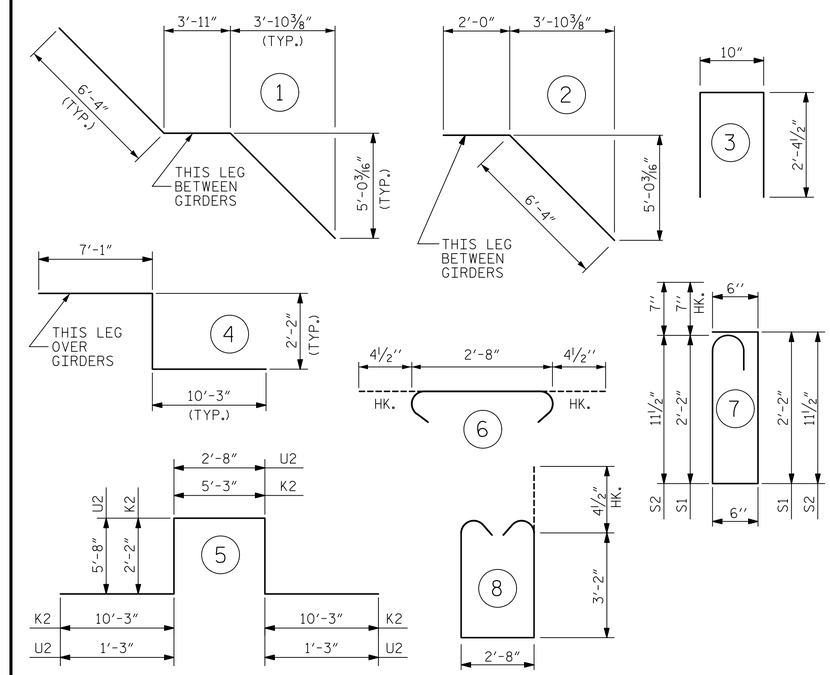

SUPERSTRUCTURE REINFORCING STEEL LENGTHS ARE BASED ON THE FOLLOWING MINIMUM SPLICE LENGTHS

BAR SIZE	SUPERSTRUCTURE EXCEPT APPROACH SLABS, PARAPET, AND BARRIER RAIL		APPROACH SLABS		PARAPET AND BARRIER RAIL
	EPOXY COATED	UNCOATED	EPOXY COATED	UNCOATED	
#4	1'-11"	1'-7"	1'-11"	1'-7"	2'-6"
#5	2'-5"	2'-0"	2'-5"	2'-0"	3'-1"
#6	2'-10"	2'-5"	3'-7"	2'-5"	3'-8"
#7	4'-2"	2'-9"			
#8	4'-9"	3'-2"			

GROOVING BRIDGE FLOORS

APPROACH SLABS	990 SQ.FT.
BRIDGE DECK	6,764 SQ.FT.
TOTAL	7,754 SQ.FT.

PROJECT NO. BR-0042
ROCKINGHAM COUNTY
STATION: 19+56.99 -L-

SUPERSTRUCTURE BILL OF MATERIAL

	CLASS AA CONCRETE	REINFORCING STEEL	EPOXY COATED REINFORCING STEEL
	(CU. YDS.)	(LBS.)	(LBS.)
SPANS A, B	---	22,885	24,464
POUR #1	93.3	---	---
POUR #2	129.7	---	---
TOTAL ✳✳	223.0	22,885	24,464

✳✳QUANTITIES FOR CONCRETE BARRIER RAIL ARE NOT INCLUDED.

DOCUMENT NOT CONSIDERED FINAL UNLESS ALL SIGNATURES COMPLETED

AECOM
AECOM TECHNICAL SERVICES OF NC, INC.
701 CORPORATE CENTER DRIVE, SUITE 475
RALEIGH, NC 27607
(919) 854-6200 www.aecom.com
AECOM License No. F-0342

DocuSigned by: John C. Morrison
NORTH CAROLINA PROFESSIONAL SEAL 030474 ENGINEER JOHN C. MORRISON
5/27/2020

STATE OF NORTH CAROLINA
DEPARTMENT OF TRANSPORTATION
RALEIGH

SUPERSTRUCTURE

BILL OF MATERIAL

REVISIONS							SHEET NO.
NO.	BY:	DATE:	NO.	BY:	DATE:		S-17
1			3				TOTAL SHEETS
2			4				28

DRAWN BY : T.B. STUMP	DATE : 06/2019		
CHECKED BY : J.C. MORRISON	DATE : 06/2019		
DESIGNED BY : T.B. STUMP	DATE : 06/2019		
DESIGN CHECKED BY : J.C. MORRISON	DATE : 06/2019		

DATE: 5/27/2020
TIME: 12:57:00 PM
USER: mwinck
DGN: \\usra13fj000\Data\Proj\bridge\60517086 - BR-0042\900_CAD_DSYS\0_CADVTO_NCDOT_TIP\Structures\04 Drawings\400_33_STR_BR-0042_SMU_BOM.dgn