DocuSign Envelope ID: 5EB0F56F-AE77-408B-8F51-7A845ED7F1E7

BARREL REINFORCING STEEL

STAGE I						STAGE II					
BAR	NO	SIZE	TYPE	LENGTH	WEIGHT	BAR	NO	SIZE	TYPE	LENGTH	WEIGHT
A1	301	5	1	6'-10"	2145	A1	301	5	1	6'-10"	2145
A2	301	5	1	7'-0"	2198	A2	301	5	1	7'-0"	2198
A3	301	4	1	7'-0"	1407						
						A100	290	5	STR	22'-1"	6680
A200	294	5	STR	14'-6"	4446	A101	2	5	STR	20'-8	43
A201	2	5	STR	13'-2"	27	A102	2	5	STR	18'-9	39
A202	2	5	STR	11'-3"	23	A103	2	5	STR	16'-11	35
A203	2	5	STR	9'-5"	20	A104	2	5	STR	15-0	31
A204	2	5	STR	7'-6"	16	A105	2	5	STR	13-2	27
A205	2	5	STR	5'-8"	12	A106	2	5	STR	11'-4	24
A206	2	5	STR	3'-10"	8	A107	2	5	STR	9'-5	20
A207	2	5	STR	2'-0"	4	A108	2	5	STR	7'-7	16
						A109	2	5	STR	5'-8	12
A400	294	6	STR	15'-1"	6661	A110	2	5	STR	3'-10	8
A401	2	6	STR	13'-5"	40	A111	2	5	STR	2'-0"	4
A402	2	6	STR	11'-6"	35						
A403	2	6	STR	9'-8"	29	A210	297	5	STR	9'-8"	2994
A404	2	6	STR	7'-10"	24	A211	2	5	STR	7'-11"	17
A405	2	6	STR	5'-11"	18	A212	2	5	STR	6'-0"	13
A406	2	6	STR	4'-1"	12	A213	2	5	STR	4'-2"	9
A407	2	6	STR	2'-3"	7	A214	2	5	STR	2'-4"	5
B1	151	4	STR	10'-4"	1042	A300	290	6	STR	22'-1"	9619
B2	301	4	STR	6'-4"	1273	A301	2	6	STR	20'-8	62
B3	301	4	STR	10'-4"	2078	A302	2	6	STR	18'-9	56
						A303	2	6	STR	16'-11	51
C1	258	4	STR	26'-9"	4610	A304	2	6	STR	15-0	45
						A305	2	6	STR	13-2	40
D1	6	6	STR	3'-7"	32	A306	2	6	STR	11'-4	34
						A307	2	6	STR	9'-5	28
S2	6	8	STR	17'-11"	287	A308	2	6	STR	7'-7	23
						A309	2	6	STR	5'-8	17
REINFORCING STEEL					26,454 LBS	A310	2	6	STR	3'-10	12
						A311	2	6	STR	2'-0"	6
						A410	297	6	STR	9'-8"	4312
						A411	2	6	STR	7'-11"	24
						A412	2	6	STR	6'-0"	18
						A413	2	6	STR	4'-2"	13
						A414	2	6	STR	2'-4"	7
						B1	151	4	STR	10'-4"	1042
						B2	302	4	STR	6'-4"	1278
						C1	336	4	STR	26'-9"	6004
						G1	8	5	STR	22'-10"	191
						S3	6	8	STR	9'-11"	159
						S4	6	8	STR	22'-10"	366
						REINFORCING STEEL					37,727 LBS

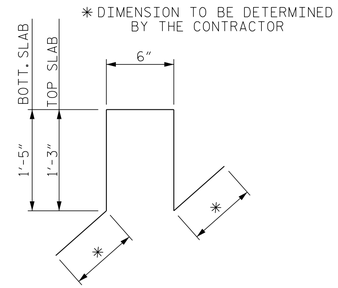

STANDEE DETAIL

THE COST OF THE STANDEES SHALL BE INCLUDED IN THE VARIOUS PAY ITEMS.

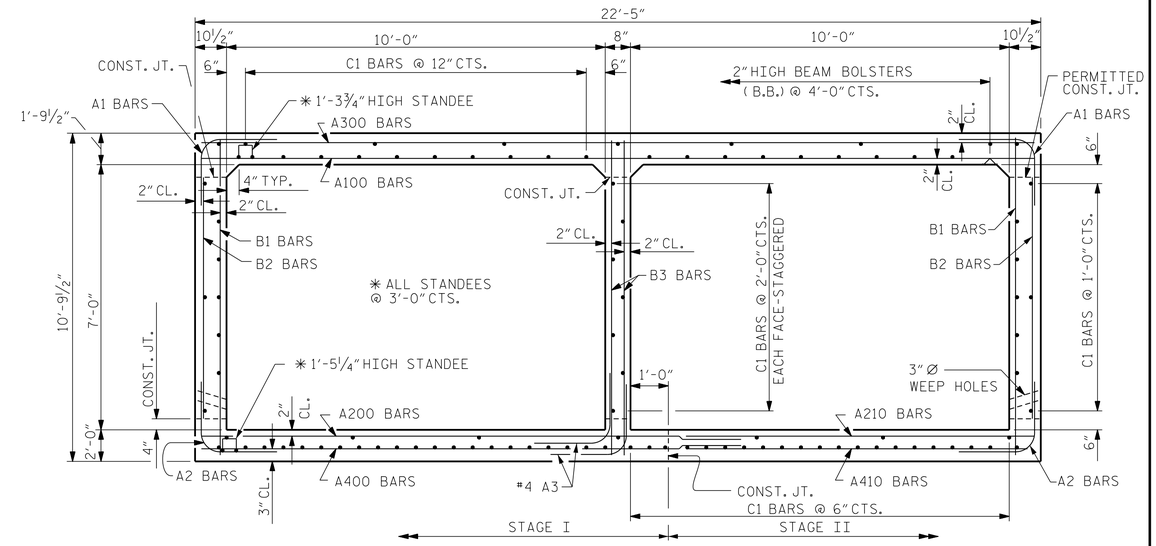

RIGHT ANGLE SECTION OF BARREL

LOOKING UPSTREAM
THERE ARE 99 "C" BARS IN SECTION OF BARREL.

SPLICE LENGTHS CHART

BAR	SIZE	SPLICE LENGTH
A200	#5	2'-2"
A400	#6	2'-9"
B1, B3	#4	1'-9"
C1	#4	1'-11"
"S"	#8	4'-11"

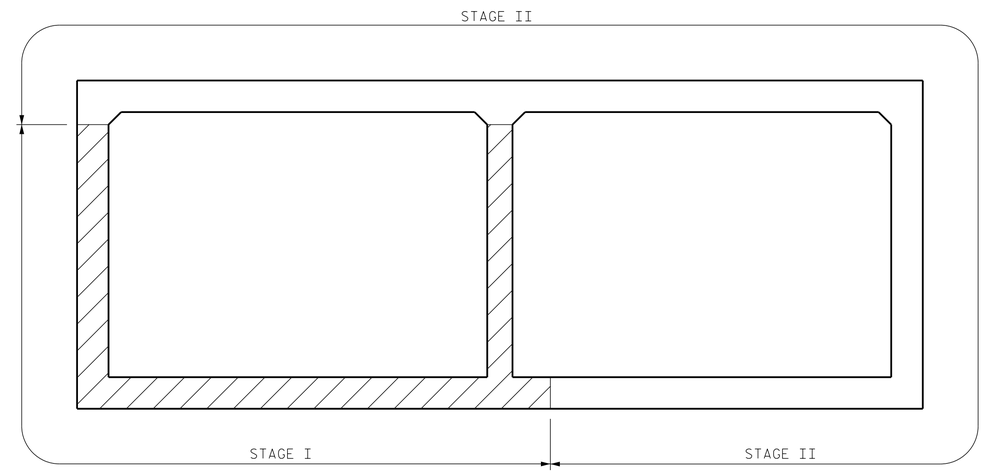

CONSTRUCTION SEQUENCE

LOOKING UPSTREAM

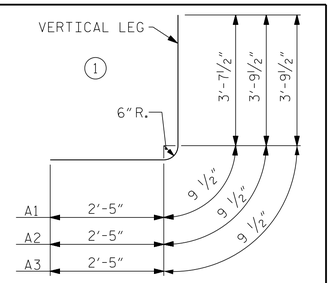

BAR TYPE

BAR DIMENSIONS ARE OUT TO OUT

PROJECT NO. W-5600
JOHNSTON COUNTY
STATION: 28+84.00 -Y7-

SHEET 6 OF 8

ENGINEER OF RECORD: 3/25/2019
NORTH CAROLINA PROFESSIONAL SEAL 14091 ENGINEER BUCK CHARLES HUNT
DocuSigned by: Buck Charles Hunt
WETHERILL ENGINEERING
1223 Jones Franklin Rd.
Raleigh, N.C. 27606
Bus: 919 851 8077
Fax: 919 851 8107
LICENSE NO. F-0377

STATE OF NORTH CAROLINA
DEPARTMENT OF TRANSPORTATION
RALEIGH

DOUBLE 10 FT. X 7 FT. CONCRETE BOX CULVERT 106° SKEW

REVISIONS						SHEET NO.
NO.	BY:	DATE:	NO.	BY:	DATE:	C3-6
1			3			TOTAL SHEETS
2			4			8

DOCUMENT NOT CONSIDERED FINAL UNLESS ALL SIGNATURES COMPLETED

DRAWN BY : B.C. HUNT DATE : 5-18
CHECKED BY : J.A. DILWORTH DATE : 5-18

P:\2017\17121.0.1_W-5600_US70\Structures\Culverts\C514\DGN\W5600_C514_WEI_cb222.dgn
3/20/2019 1:30:50 PM