DocuSign Envelope ID: 2E2A5C37-82C0-4317-8167-95FE9B2C3BB6

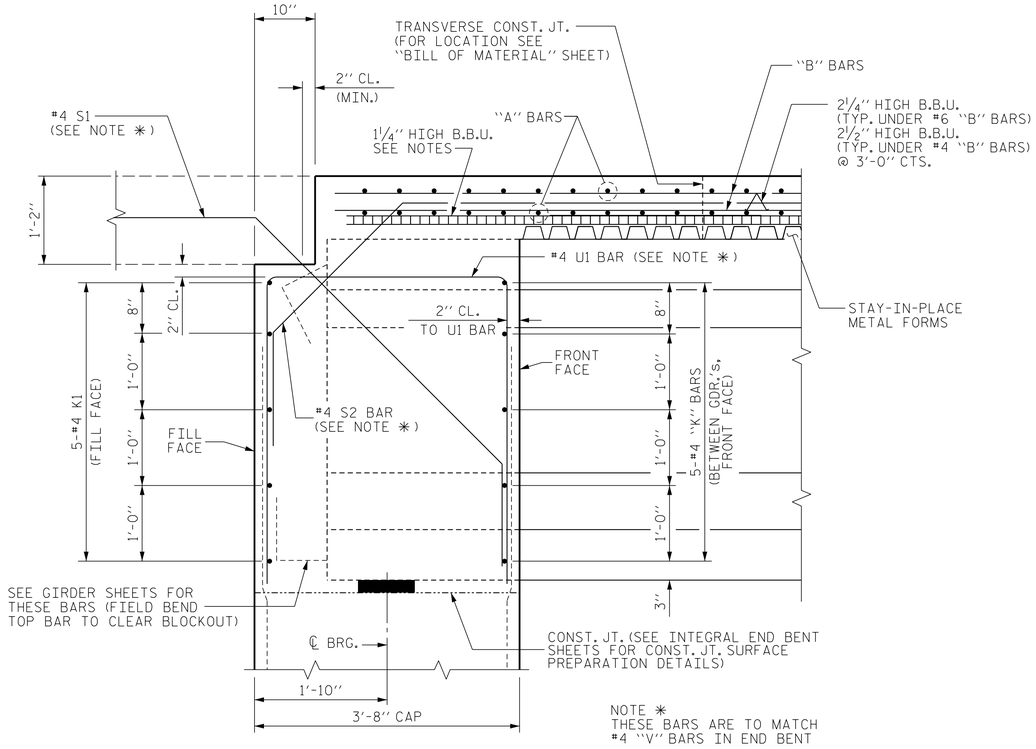

SECTION THRU INTEGRAL END BENT

(SHOWN PERPENDICULAR TO FILL FACE)

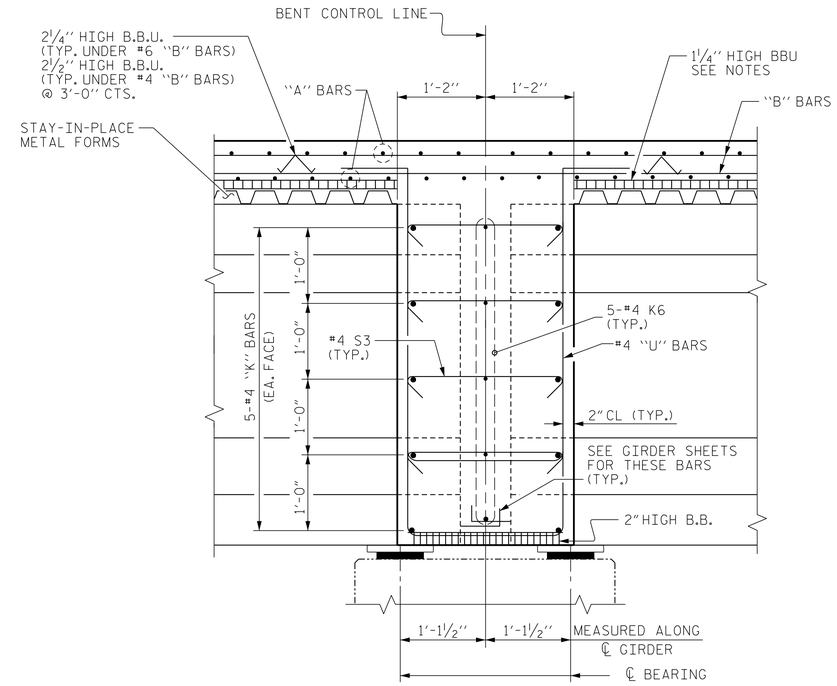

SECTION THRU CONTINUOUS BENT DIAPHRAGM

(SHOWN PERPENDICULAR TO BENT CONTROL LINE)

NOTES:

PROVIDE 1¼" HIGH BEAM BOLSTERS UPPER AT 4'-0" CTS. ATOP THE METAL STAY-IN-PLACE FORMS TO SUPPORT THE BOTTOM MAT OF 'A' BARS. WHEN USING REMOVABLE FORMS, PROVIDE CONTINUOUS HIGH CHAIRS FOR METAL DECK (C.H.C.M.) @ 4'-0" CTS. WITH A HEIGHT TO SUPPORT THE BOTTOM MAT OF 'A' BARS A CLEAR DISTANCE OF 2½" ABOVE THE TOP OF THE REMOVABLE FORM.

LONGITUDINAL STEEL MAY BE SHIFTED SLIGHTLY, AS NECESSARY, TO AVOID INTERFERENCE WITH STIRRUPS IN PRESTRESSED CONCRETE GIRDERS.

PREVIOUSLY CAST CONCRETE IN A CONTINUOUS UNIT SHALL HAVE ATTAINED A MINIMUM COMPRESSIVE STRENGTH OF 3,000 PSI BEFORE ADDITIONAL CONCRETE IS CAST IN THE UNIT.

CONCRETE PARAPET IN A CONTINUOUS UNIT SHALL NOT BE CAST UNTIL ALL SLAB CONCRETE IN THE UNIT HAS BEEN CAST AND HAS REACHED A MINIMUM COMPRESSIVE STRENGTH OF 3,000 PSI.

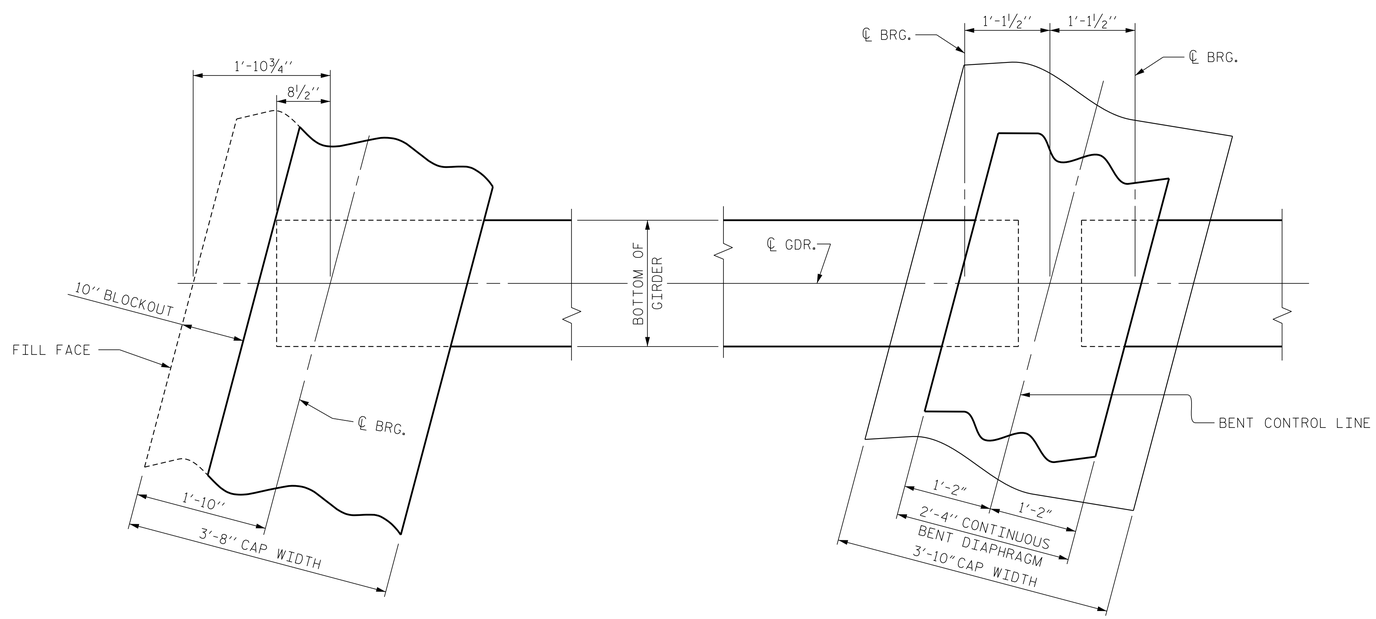

PLAN OF DIAPHRAGMS

PROJECT NO. W-5600

JOHNSTON COUNTY

STATION: 27+01.91 -Y7-

SHEET 2 OF 2

ENGINEER OF RECORD: 3/25/2019

NORTH CAROLINA PROFESSIONAL SEAL 37400 ENGINEER GREGORY M. GILLAND

DocuSigned by: Gregory M. Gilland A3964A80E52A45...

ETHERILL ENGINEERING

1223 Jones Franklin Rd. Raleigh, N.C. 27606 Bus: 919 851 8077 Fax: 919 851 8107 LICENSE NO. F-0377

STATE OF NORTH CAROLINA
DEPARTMENT OF TRANSPORTATION
RALEIGH

SUPERSTRUCTURE

TYPICAL SECTION

REVISIONS						SHEET NO.
NO.	BY:	DATE:	NO.	BY:	DATE:	S3-6
1			3			TOTAL SHEETS
2			4			32

DRAWN BY : D. HODGE DATE : 11/17

CHECKED BY : G.M. GILLAND DATE : 1/18

DOCUMENT NOT CONSIDERED FINAL UNLESS ALL SIGNATURES COMPLETED

P:\2017\17121.01_W-5600_US70\Structures\DGN\Y7-over-L-W-5600_Y7_TS_WEI.dgn
3/20/2019 10:10:07 AM