DocuSign Envelope ID: 0EB02064-0462-43E9-8F84-6B1D3B09F623

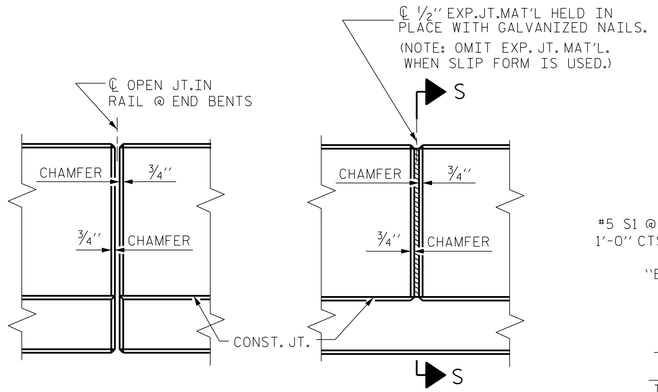

ELEVATION AT EXPANSION JOINTS

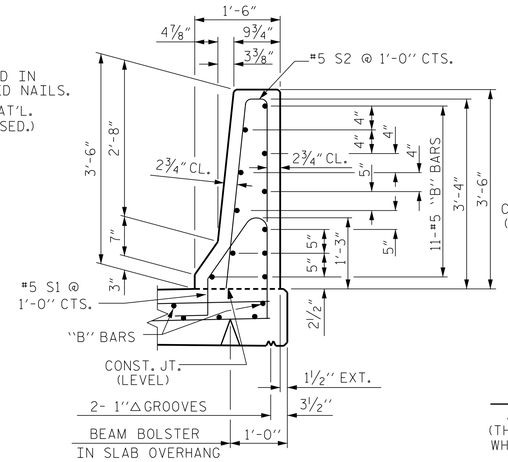

SECTION THRU RAIL

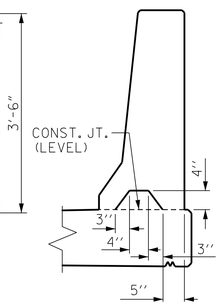

SECTION S-S

AT DAM IN OPEN JOINT
(THIS IS TO BE USED ONLY
WHEN SLIP FORM IS USED)

BARRIER RAIL DETAILS

NOTES

THE BARRIER RAIL SHALL NOT BE CAST UNTIL ALL SLAB CONCRETE HAS BEEN CAST AND HAS REACHED A MINIMUM COMPRESSIVE STRENGTH OF 3,000 PSI.

WHEN FOAM JOINT SEAL IS REQUIRED, THE JOINT IN THE DECK SHALL BE SAWED PRIOR TO THE CASTING OF BARRIER RAIL.

ALL REINFORCING STEEL IN BARRIER RAILS SHALL BE EPOXY COATED.

THE #5 S3, S4, S5 AND S6 BARS SHALL BE INSTALLED, USING AN ADHESIVE ANCHORING SYSTEM, AFTER SAWING THE JOINT. THE YIELD LOAD FOR THE #5 S3, S4, S5 AND S6 BARS IS 18.6 KIPS. FIELD TESTING FOR THE ADHESIVE BONDING SYSTEM IS NOT REQUIRED.

GROOVED CONTRACTION JOINTS, 1/2'' IN DEPTH, SHALL BE TOOLED IN ALL EXPOSED FACES OF THE BARRIER RAIL AND IN ACCORDANCE WITH ARTICLE 825-10(B) OF THE STANDARD SPECIFICATIONS. THE CONTRACTION JOINT SHALL BE LOCATED AT EACH THIRD POINT BETWEEN BARRIER RAIL EXPANSION JOINTS. ONLY ONE CONTRACTION JOINT IS REQUIRED AT MIDPOINT OF BARRIER RAIL SEGMENTS LESS THAN 20 FEET IN LENGTH AND NO CONTRACTION JOINTS ARE REQUIRED FOR THOSE SEGMENTS LESS THAN 10 FEET IN LENGTH.

THE #5 S1 AND S2 BARS MAY BE SHIFTED SLIGHTLY IN ORDER TO MAINTAIN A 2'' MINIMUM CLEARANCE TO THE 1/2'' EXPANSION JOINT MATERIAL IN THE RAIL.

BAR TYPES

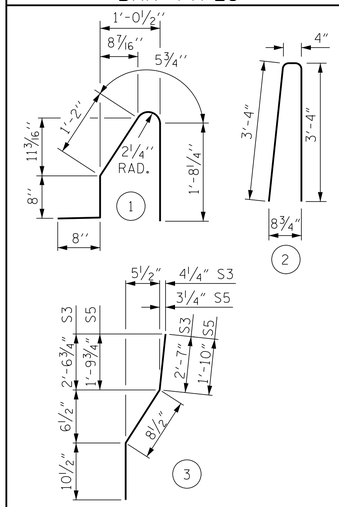

ALL BAR DIMENSIONS ARE OUT TO OUT

BILL OF MATERIAL

FOR CONCRETE BARRIER RAIL ONLY

BAR	No.	SIZE	TYPE	LENGTH	WEIGHT
* S1	178	#5	1	4'-8''	866
* S2	178	#5	2	7'-0"	1300
* S3	8	#5	3	4'-2"	35
* S4	8	#5	STR	4'-0"	33
* S5	4	#5	3	3'-5"	14
* S6	4	#5	STR	3'-3"	14
* B1	44	#5	STR	23'-4''	1071
* B2	88	#5	STR	13'-8"	1254

* EPOXY COATED REINFORCING STEEL	4587 LBS.
CLASS AA CONCRETE	25.9 CU. YDS.
CONCRETE BARRIER RAIL	190.62 LIN. FT.

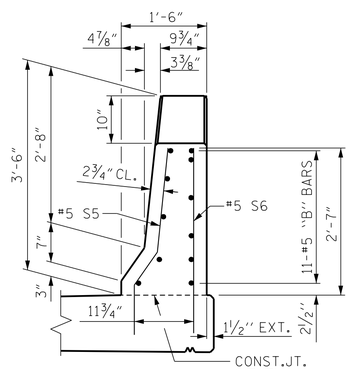

END VIEW
(RIGHT SIDE)

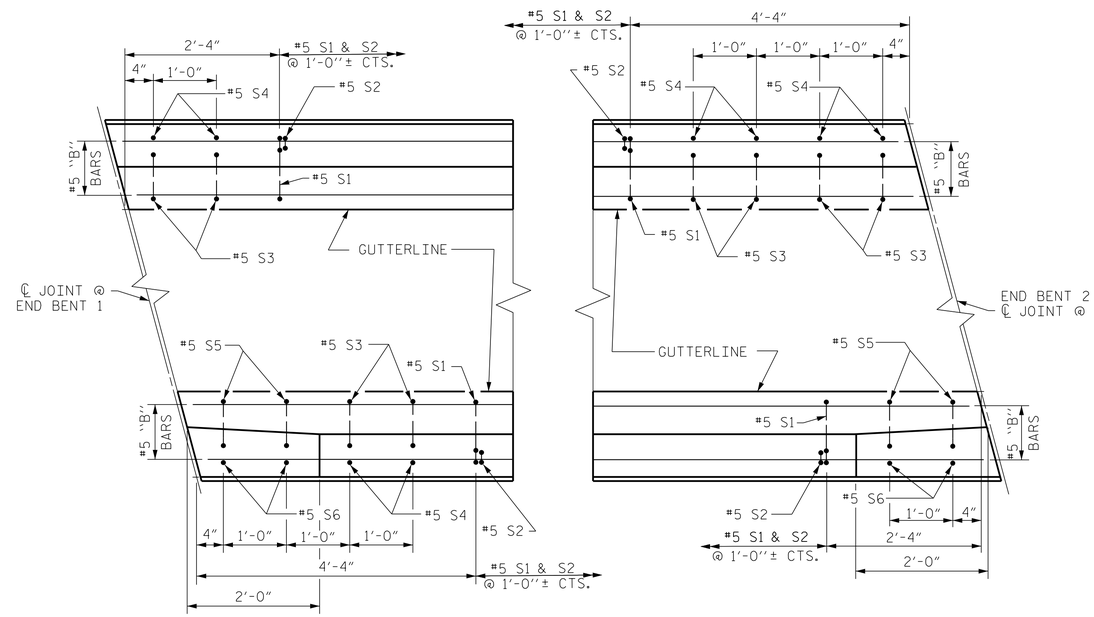

PLAN

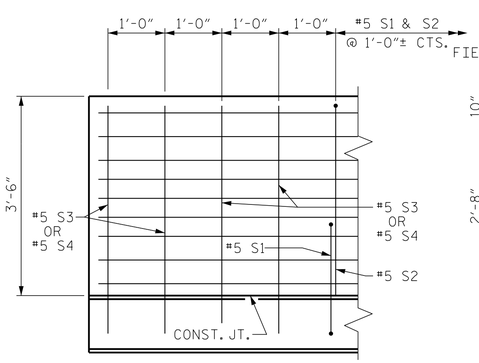

SIDE VIEW
(LEFT SIDE)

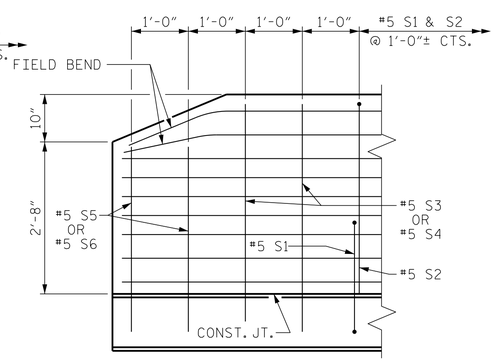

SIDE VIEW
(RIGHT SIDE)

END OF RAIL DETAILS

FOR ADHESIVE ANCHORING AT SAWED JOINTS

PROJECT NO. W-5600
JOHNSTON COUNTY
STATION: 217+31.76 -L-

SHEET 2 OF 2

ENGINEER OF RECORD:
3/25/2019
NORTH CAROLINA PROFESSIONAL SEAL 37400 ENGINEER GREGORY M. GILLAND

Developed by: Gregory M. Gilland
WETHERILL ENGINEERING
1223 Jones Franklin Rd.
Raleigh, N.C. 27606
Bus: 919 851 8077
Fax: 919 851 8107
LICENSE NO. F-0377

STATE OF NORTH CAROLINA
DEPARTMENT OF TRANSPORTATION
RALEIGH

STANDARD
CONCRETE
BARRIER RAIL
(RIGHT LANE)

REVISIONS								SHEET NO.
NO.	BY:	DATE:	NO.	BY:	DATE:			S2-12
1			3					TOTAL SHEETS
2			4					18

DOCUMENT NOT CONSIDERED FINAL UNLESS ALL SIGNATURES COMPLETED

ASSEMBLED BY : J. PENDERGRAFT		DATE : 12-17	
CHECKED BY : D. HODGE		DATE : 1-18	
DRAWN BY : ARB 5/87	REV. 7/12	MAA/GM	
CHECKED BY : SJD 9/87	REV. 6/13	MAA/GM	
	REV. 12/17	MAA/THC	

STD. NO. CBR1 (SHT 3)

P:\2017\17121.01_W-5600_US70\Structures\DGN\-L- over -Y9-\DGN (RIGHT LANE)\W-5600_Y9_BR (RIGHT LANE)_WE1.dgn
3/20/2019 9:26:57 AM