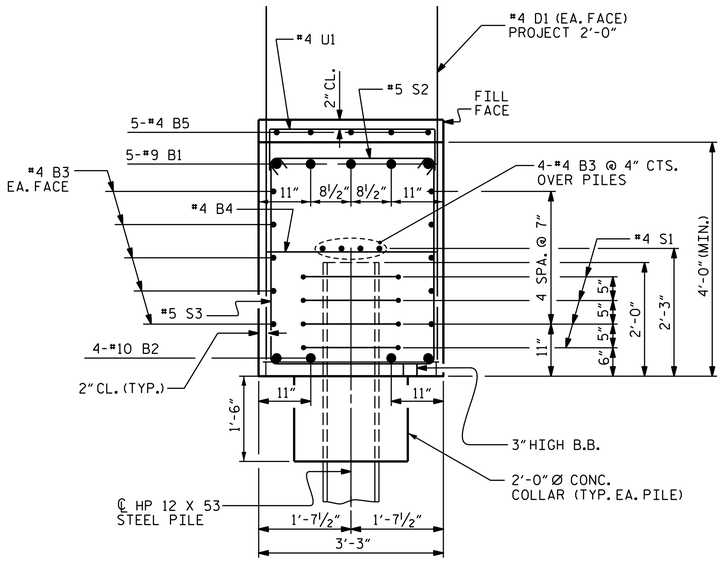

SECTION A-A

BAR TYPES

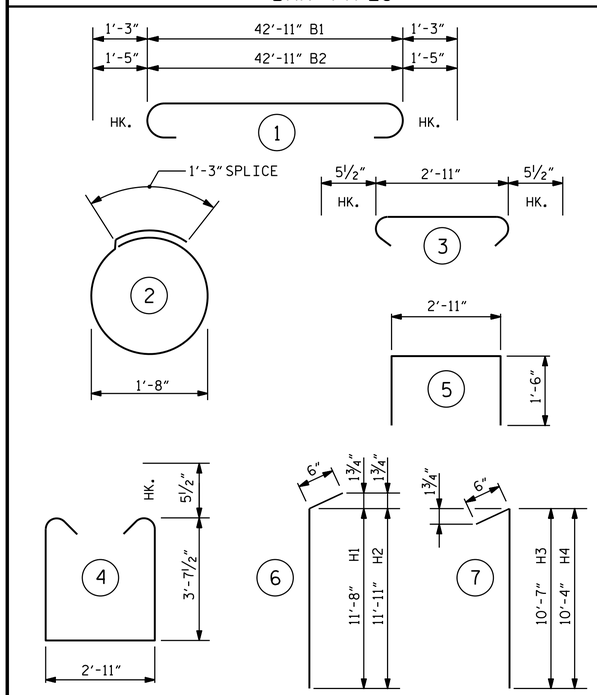

ALL BAR DIMENSIONS ARE OUT TO OUT.

BILL OF MATERIAL

END BENT 1

BAR	NO.	SIZE	TYPE	LENGTH	WEIGHT
B1	5	9	1	45'-5"	772
B2	4	10	1	45'-9"	787
B3	28	4	STR.	22'-8"	424
B4	11	4	STR.	2'-11"	21
B5	20	4	STR.	7'-3"	97
D1	54	4	STR.	5'-10"	210
H1	20	5	6	12'-2"	254
H2	20	5	6	12'-5"	259
H3	20	5	7	11'-1"	231
H4	20	5	7	10'-10"	226
K1	24	4	STR.	2'-10"	45
S1	28	4	2	6'-6"	122
S2	36	5	3	3'-10"	144
S3	36	5	4	11'-1"	416
U1	20	4	5	5'-11"	79
V1	30	5	STR.	10'-2"	318
V2	28	5	STR.	9'-8"	282

REINFORCING STEEL, LBS.		4687
CLASS A CONCRETE, CY	POUR 1	26.5
	POUR 2	6.2
	TOTAL	32.7
HP 12X53 STEEL PILES	NO.	7
	L.F.	385
PILE DRIVING EQUIPMENT SETUP FOR HP 12X53 STEEL PILES, EA.		7
PILE REDRIVES, EA.		4

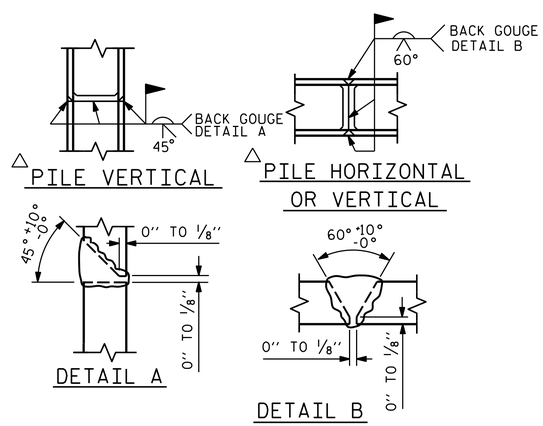

△ POSITION OF PILE DURING WELDING.

PILE SPLICE DETAILS

PROJECT NO. B-5671

EDGECOMBE COUNTY

STATION: 17+00.00 -L-

SHEET 3 OF 3

STATE OF NORTH CAROLINA
DEPARTMENT OF TRANSPORTATION
RALEIGH

SUBSTRUCTURE END BENT 1

DocuSigned by: DB3C8E45B06D499

NORTH CAROLINA PROFESSIONAL SEAL 14114 ENGINEER R. CHERRY LARSON

1/24/2020

DESIGN ENGINEER OF RECORD:	DATE : 1/24/2020
DRAWN BY : R. J. FLORY	DATE : 08/30/19
CHECKED BY : R. C. LARSON	DATE : 09/05/19

DOCUMENT NOT CONSIDERED FINAL UNLESS ALL SIGNATURES COMPLETED

ENGINEERS • PLANNERS • SCIENTISTS • CONSTRUCTION MANAGERS LICENSE NUMBER: C-0764
KCI Associates of North Carolina, P.A.
4505 Falls of Neuse Road, Suite 400 Raleigh, NC 27609-6270 Phone (919) 785-9241

REVISIONS									SHEET NO.
NO.	BY:	DATE:	NO.	BY:	DATE:				S-20
1			3						TOTAL SHEETS
2			4						29

KCI PROJ. #251801945.24