DocuSign Envelope ID: 808CC66F-6F3A-4973-8B77-E7F48B11129E

NOTES

FOR SUPERSTRUCTURE NOTES, SEE "TYPICAL SECTION" SHEET 1 OF 3.

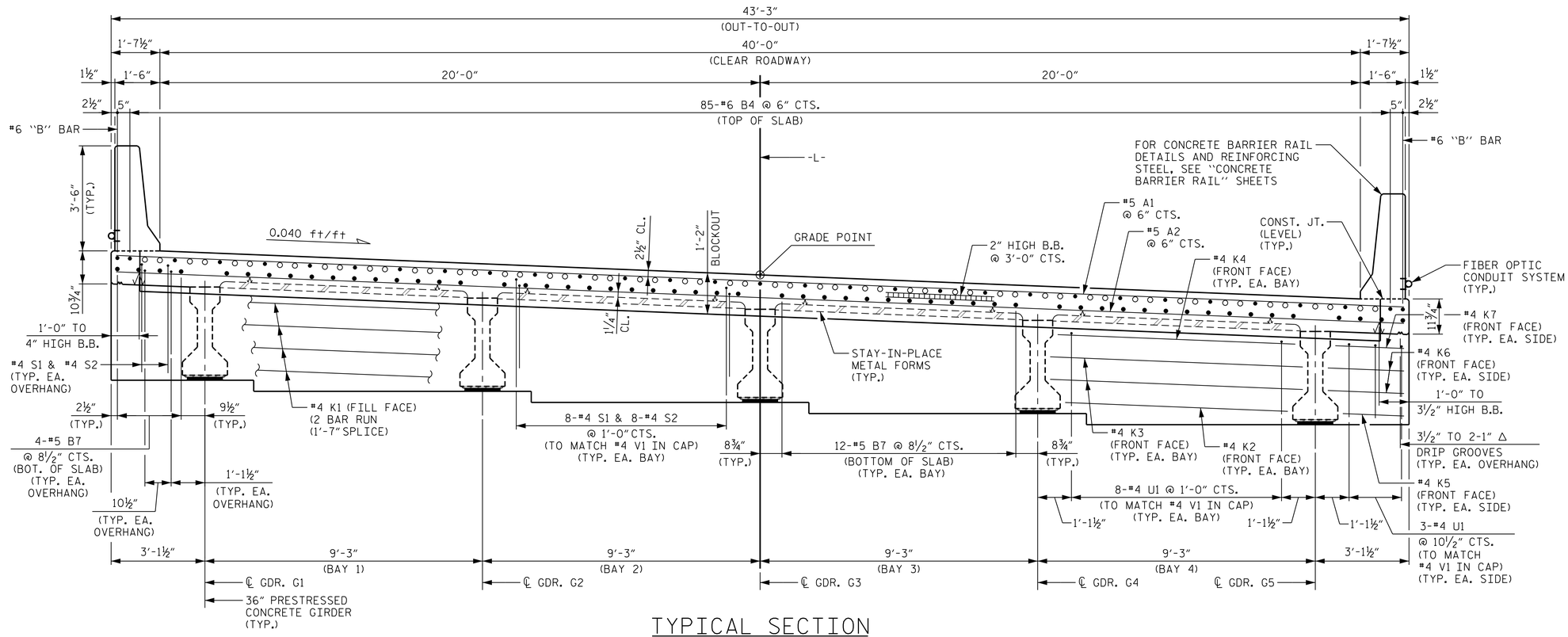

TYPICAL SECTION

(SHOWING INTEGRAL END BENT DIAPHRAGM)

○ INDICATES NON-CONTINUOUS REINFORCING STEEL OVER END BENTS.

● INDICATES CONTINUOUS REINFORCING STEEL FROM END BENT 1 TO END BENT 2.

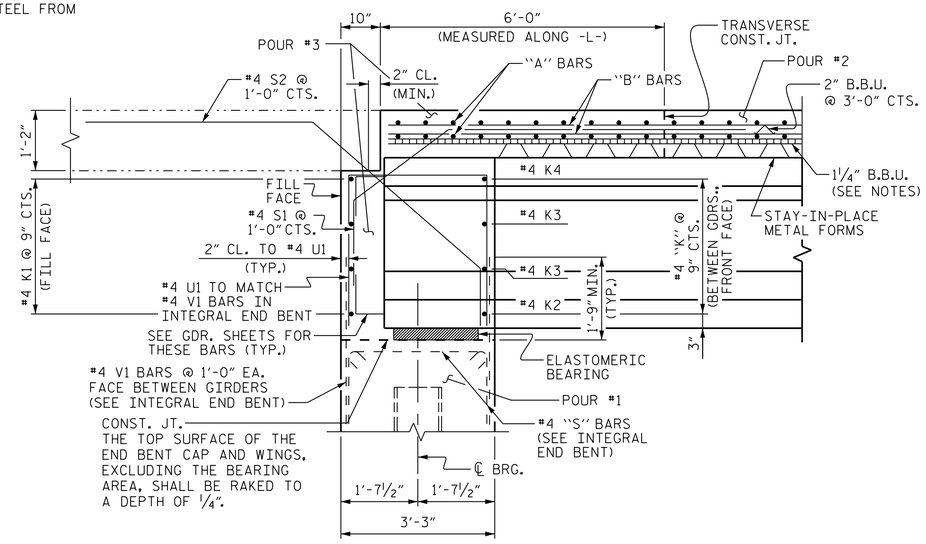

SECTION THRU INTEGRAL END BENT

(END BENT 1 SHOWN, END BENT 2 SIMILAR)

PROJECT NO. B-5534

DUPLIN COUNTY

STATION: 21+68.50 -L-

SHEET 2 OF 3

STATE OF NORTH CAROLINA
DEPARTMENT OF TRANSPORTATION
RALEIGH

SUPERSTRUCTURE

TYPICAL SECTION

NORTH CAROLINA PROFESSIONAL SEAL 045140 ENGINEER PATRICK D. COOKSEY

DocuSigned by: Patrick D. Cooksey BC7A4B9B9E7B444... 4/2/2020

Kimley»Horn
421 Fayetteville Street, Suite 600
Raleigh, NC 27601-1772
Phone (919) 677-2000
NC LICENSE # F-0102

This document, together with the concepts and designs presented herein, as an instrument of services, is intended only for the specific purpose and client for which it was prepared. Reuse of and improper reliance on this document without written consent and adaptation by Kimley-Horn and Associates, Inc. shall be without liability to Kimley-Horn and Associates, Inc.
Copyright Kimley-Horn and Associates, Inc., 2020

REVISIONS							SHEET NO.
NO.	BY:	DATE:	NO.	BY:	DATE:		S-6
1			3				TOTAL SHEETS
2			4				34

DOCUMENT NOT CONSIDERED FINAL UNLESS ALL SIGNATURES COMPLETED

DRAWN BY: D. D. LOWERY	DATE: 02/2020	
CHECKED BY: J. C. WILSON	DATE: 02/2020	
DESIGN ENGINEER OF RECORD: P. D. COOKSEY	DATE: 02/2020	

2/20/2020 K:\RDI_Structures_Bridge\NC\011036500 - B-5534\Cad\Dgn\B5534_SMU_TS2_300082.dgn