5/14/99

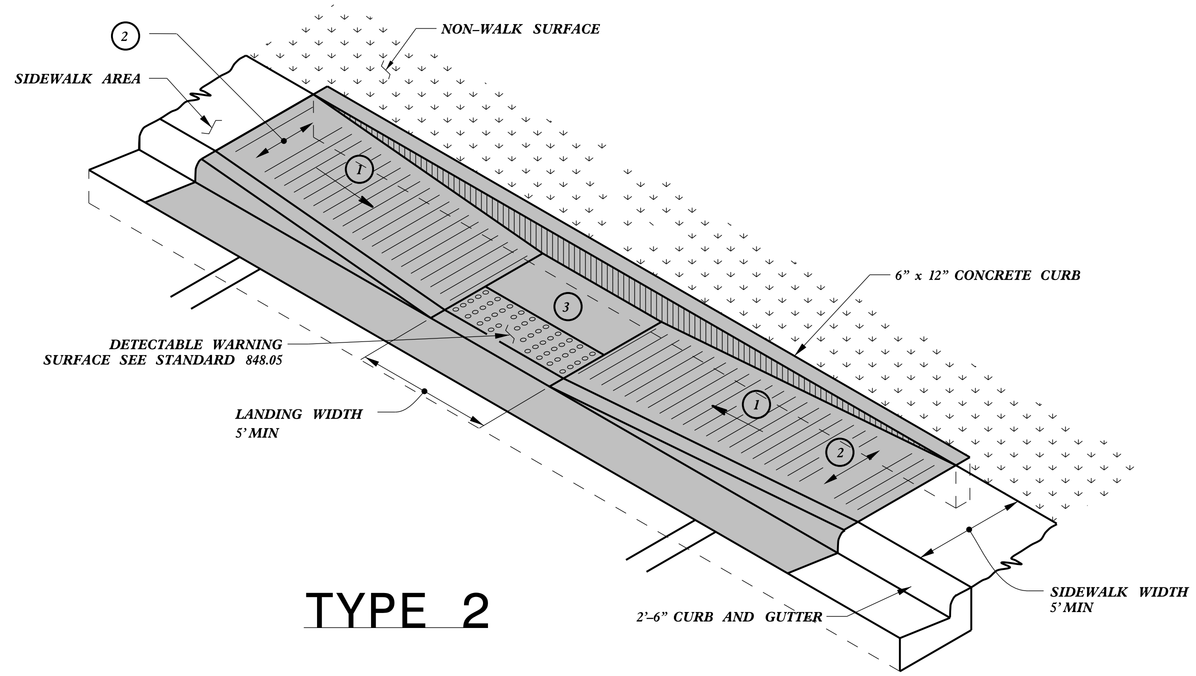

TYPE 2

PAY LIMITS FOR 1 CURB RAMP

1. 8.33% (12:1) MAX RAMP SLOPE
2. CROSS SLOPE: 2.00%
3. CURB RAMPS REQUIRE A (4'–0") MINIMUM LANDING WITH A MAXIMUM CROSS SLOPE AND LONGITUDINAL SLOPE OF 2.00% WHERE PEDESTRIANS PERFORM TURNING MANEUVERS. SLOPE TO DRAIN TO CURB.

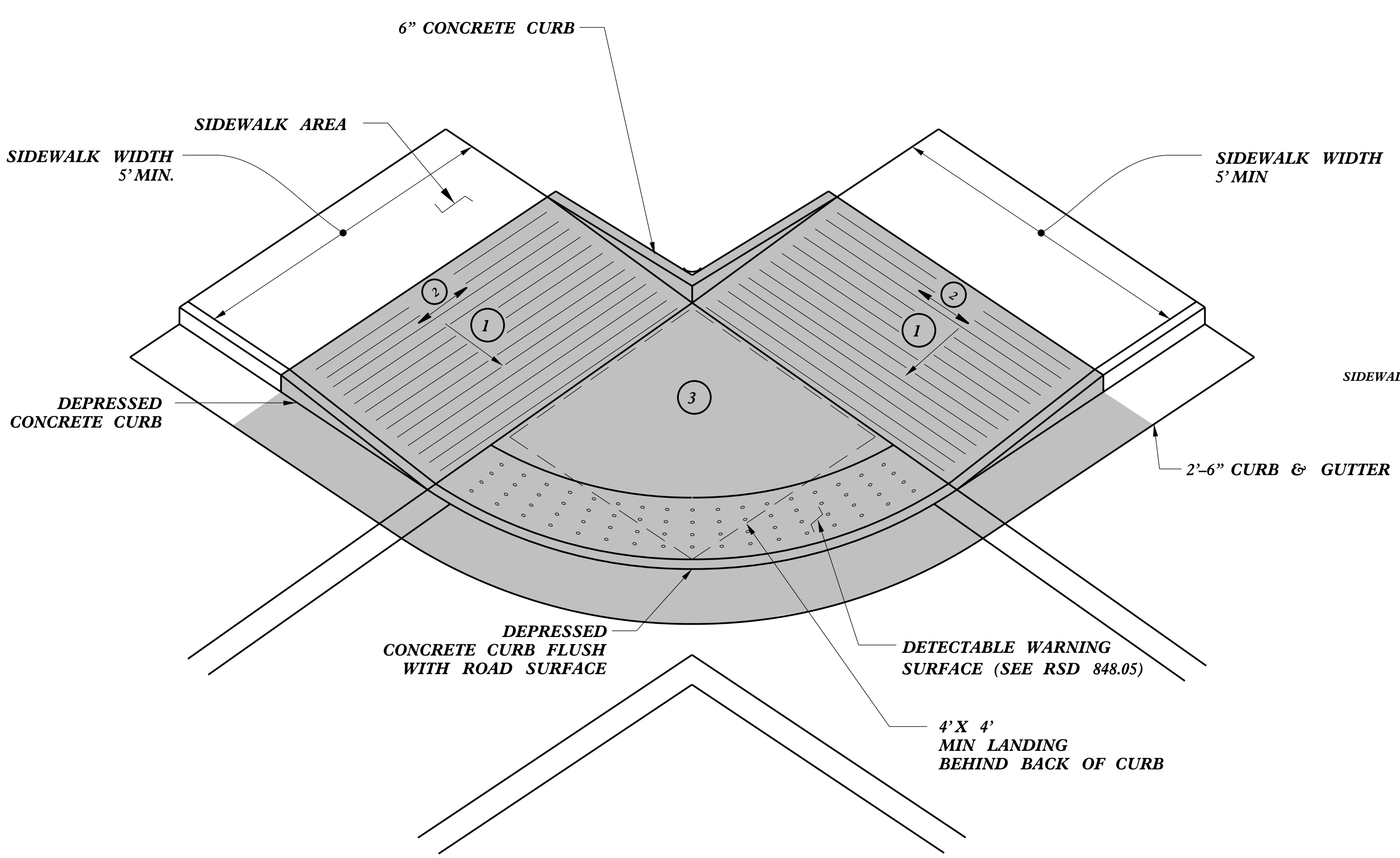

TYPE 2A

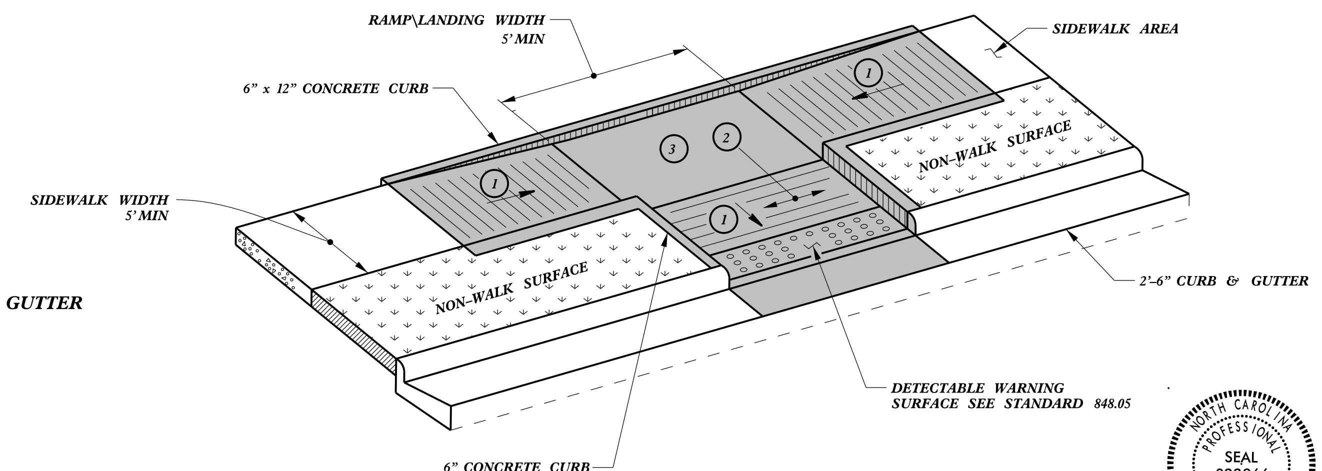

TYPE 3

NORTH CAROLINA PROFESSIONAL SEAL 022966 ENGINEER Joel S. Howerton

DocuSigned by:
Joel S Howerton
449E8E25522144F

11/18/2015

DOCUMENT NOT CONSIDERED FINAL UNLESS ALL SIGNATURES COMPLETED

REFER TO ROADWAY STANDARD DRAWING NUMBER 848.05 SHEET 3 OF 3 FOR ALL RAMP NOTES

CONTRACT STANDARDS AND DEVELOPMENT UNIT
Office 919-707-6950 FAX 919-250-4119

CURB RAMPS

Parallel Ramps

ORIGINAL BY: J.S. HOWERTON DATE: 7/7/11
MODIFIED BY: DATE:
CHECKED BY: DATE:
FILE SPEC.: stds/2012CurbRamp/CurbRampDetails.dgn

$$$$$SYSTIME$$$$$
$$$$$$$$$$DGN$$$$$$$$$$$$$$$$
$$$$USERNAME$$$$