DocuSign Envelope ID: 2EBB6A6E-9B21-4FEE-873F-2FF860DF4AD1

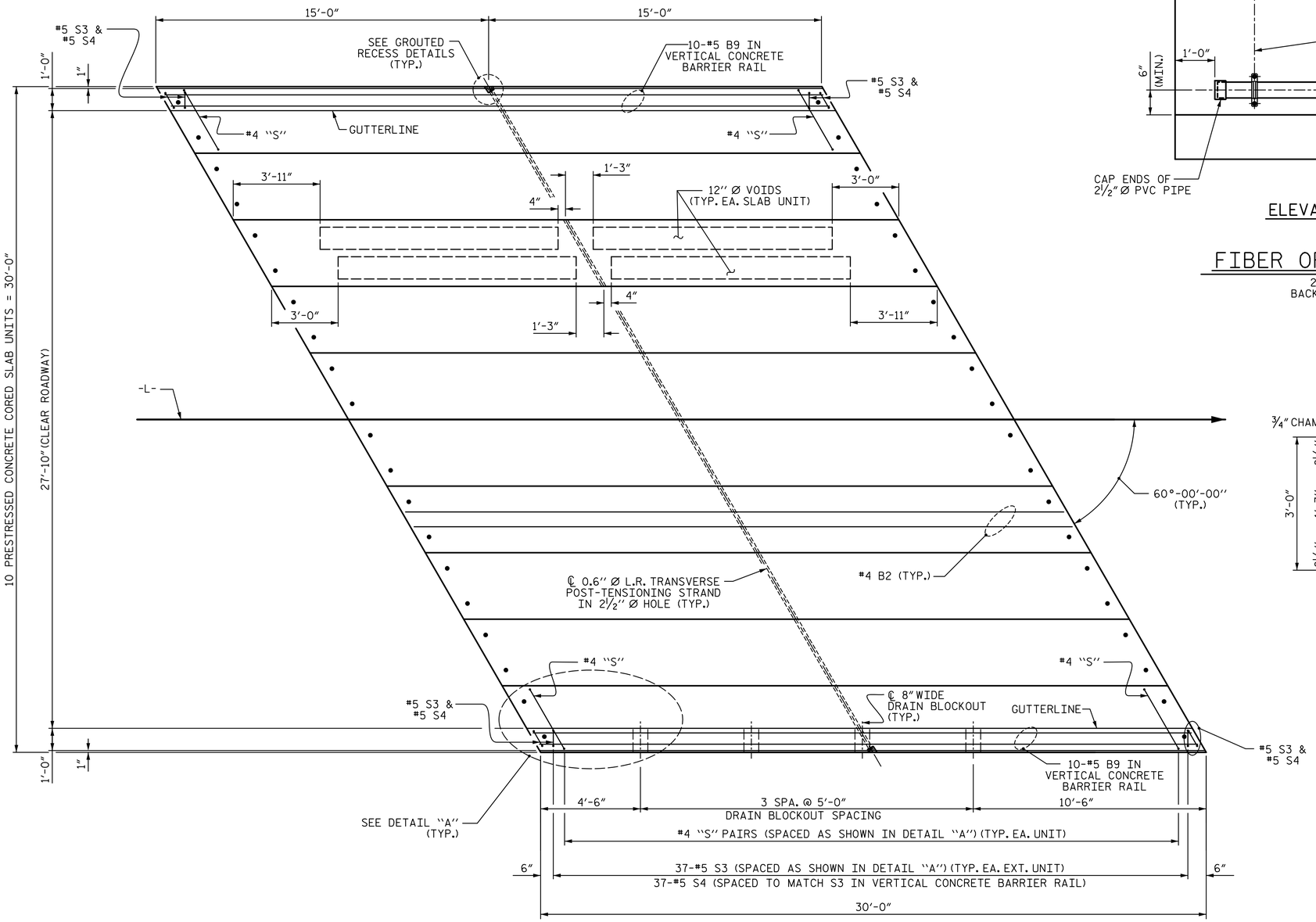


## PLAN OF UNIT

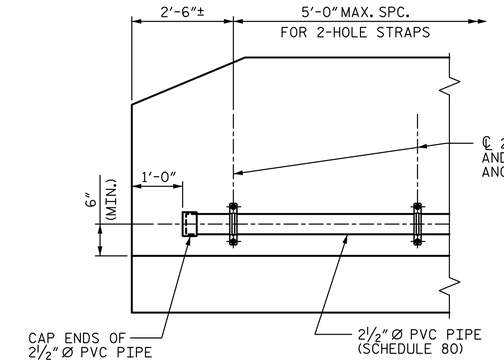


ELEVATION

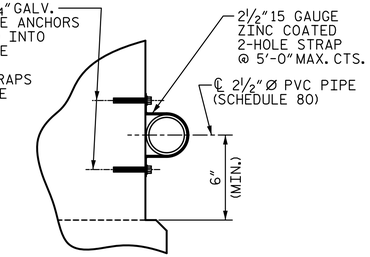


SECTION

## FIBER OPTIC CONDUIT SYSTEM DETAILS

2½" Ø SCHEDULE 80 PVC PIPE ATTACHED TO THE BACK OF BOTH RAILS FOR FUTURE FIBER OPTIC CABLE.

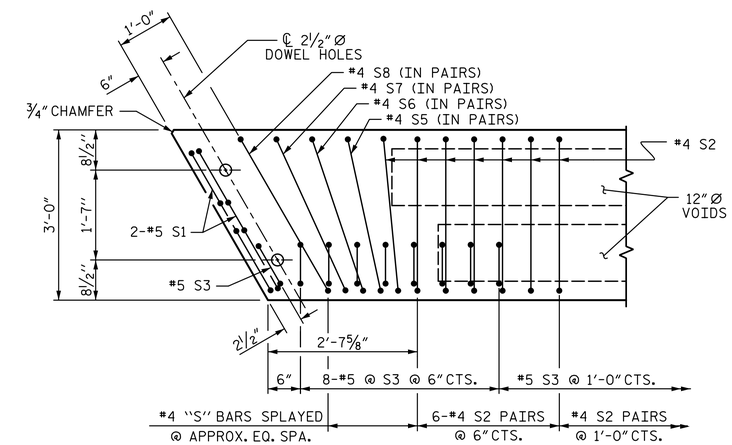


## DETAIL "A"

(SIMILAR EACH END OF UNIT)
NOTE: EXTERIOR UNIT SHOWN - INTERIOR UNIT SIMILAR EXCEPT OMIT #5 S3 BARS.

PROJECT NO. BR-0115
IREDELL COUNTY
STATION: 15+74.00 -L-

SHEET 2 OF 4

NORTH CAROLINA PROFESSIONAL SEAL 038640 ENGINEER J. WESLEY JONES 3/13/2020

STV 100 Years
STV ENGINEERS, INC.
900 West Trade St., Suite 715
Charlotte, NC 28202
NC License Number F-0991

DOCUMENT NOT CONSIDERED FINAL UNLESS ALL SIGNATURES COMPLETED

STATE OF NORTH CAROLINA
DEPARTMENT OF TRANSPORTATION
RALEIGH

PLAN OF 30' UNIT
27'-10" CLEAR ROADWAY
(SPAN A)

| REVISIONS | | | | | | SHEET NO. |
|---|---|---|---|---|---|---|
| NO. | BY: | DATE: | NO. | BY: | DATE: | S-7 |
| 1 | | | 3 | | | TOTAL SHEETS |
| 2 | | | 4 | | | 23 |

| | | | |
|---|---|---|---|
| DRAWN BY : | WAW | DATE : | 10-19 |
| CHECKED BY : | JWJ | DATE : | 12-19 |
| DESIGN ENGINEER OF RECORD : | JWJ | DATE : | 3-20 |

| | | | | |
|---|---|---|---|---|
| DRAWN BY : DGE | 3/09 | REV. | 12/5/11 | MAA/AAC |
| CHECKED BY : BCH | 3/09 | REV. | 8/14 | MAA/TMG |

JJones 3/11/2020 5:09:01 PM R:\Structures\Ustation\Finals\40I_013_BR-0115_SMU_CS2_007_480166.dgn

STD.NO. 21" PCS_30_60S_30L