DocuSign Envelope ID: C04A1927-1BDA-4F65-B1E7-A95F2215722B

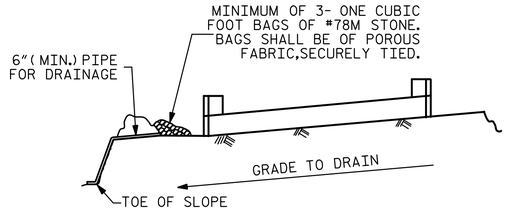

BAGGED STONE AND PIPE SHALL BE PLACED IMMEDIATELY AFTER COMPLETION OF END BENT EXCAVATION. PIPE MAY BE EITHER CONCRETE, CORRUGATED STEEL, CORRUGATED ALUMINUM ALLOY, OR CORRUGATED PLASTIC. PERFORATED PIPE WILL NOT BE ALLOWED.

BAGGED STONE SHALL REMAIN IN PLACE UNTIL THE ENGINEER DIRECTS THAT IT BE REMOVED. THE CONTRACTOR SHALL REMOVE AND DISPOSE OF SILT ACCUMULATIONS AT BAGGED STONE WHEN SO DIRECTED BY THE ENGINEER. BAGS SHALL BE REMOVED AND REPLACED WHENEVER THE ENGINEER DETERMINES THAT THEY HAVE DETERIORATED AND LOST THEIR EFFECTIVENESS.

NO SEPARATE PAYMENT WILL BE MADE FOR THIS WORK AND THE ENTIRE COST OF THIS WORK SHALL BE INCLUDED IN THE UNIT CONTRACT PRICE BID FOR THE SEVERAL PAY ITEMS.

TEMPORARY DRAINAGE AT END BENT

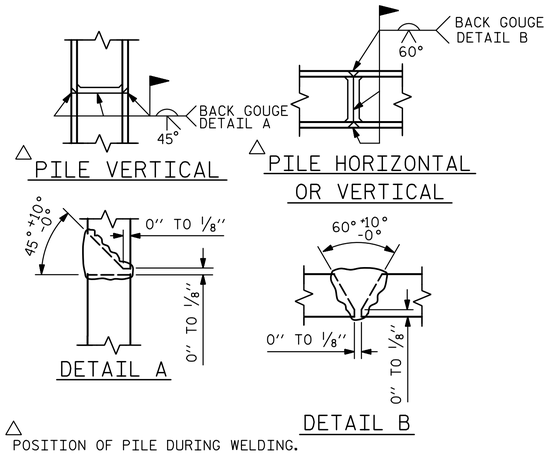

△ POSITION OF PILE DURING WELDING.

PILE SPLICE DETAILS

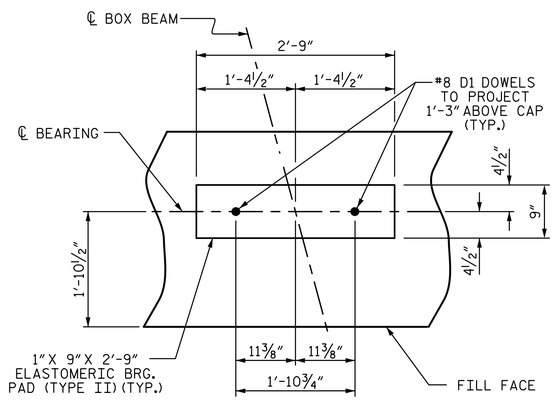

DETAIL "A"

(END BENT No. 1 SHOWN, END BENT No. 2 SIMILAR BY ROTATION)

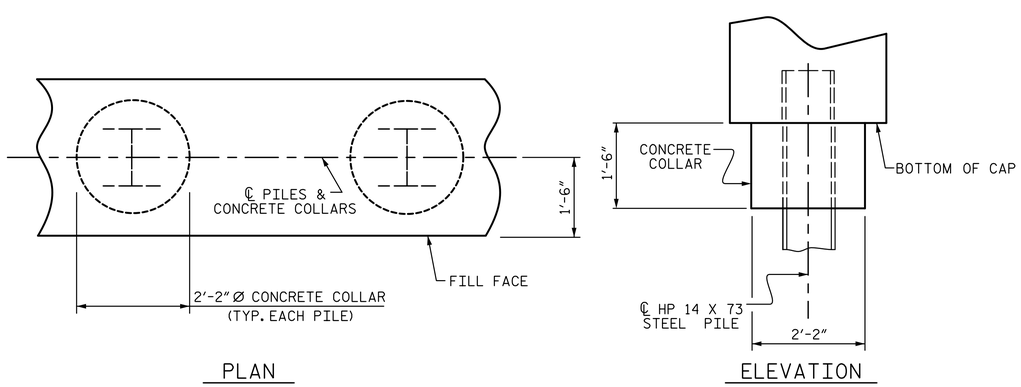

CORROSION PROTECTION FOR STEEL PILES DETAIL

(END BENT No. 1 SHOWN, END BENT No. 2 SIMILAR BY ROTATION)

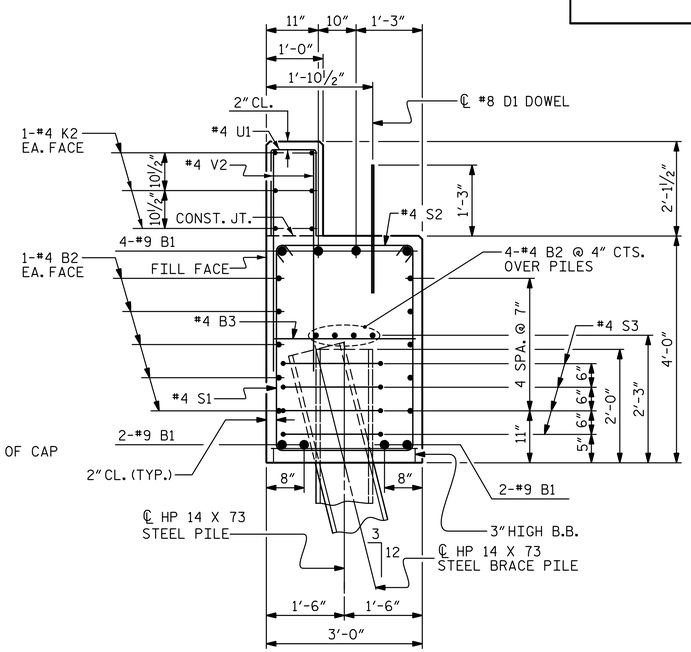

SECTION A-A

(CONCRETE COLLAR NOT SHOWN FOR CLARITY. SEE "CORROSION PROTECTION FOR STEEL PILES DETAIL.")

BAR TYPES

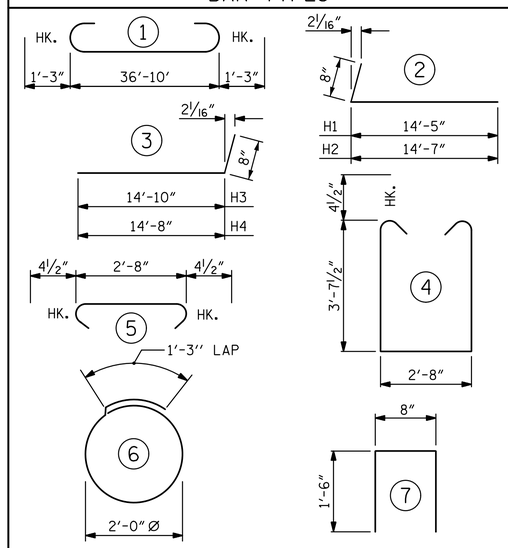

ALL BAR DIMENSIONS ARE OUT TO OUT.

END BENT No. 1	END BENT No. 2
HP 14 X 73 STEEL PILES	HP 14 X 73 STEEL PILES
NO: 5 LIN. FT.= 190	NO: 5 LIN. FT.= 100
PILE DRIVING EQUIPMENT SETUP FOR HP 14 X 73 STEEL PILES NO: 5	PILE DRIVING EQUIPMENT SETUP FOR HP 14 X 73 STEEL PILES NO: 5

BILL OF MATERIAL

FOR ONE END BENT

BAR	NO.	SIZE	TYPE	LENGTH	WEIGHT
B1	8	#9	1	39'-4"	1070
B2	28	#4	STR	19'-9"	369
B3	10	#4	STR	2'-8"	18
D1	20	#8	STR	2'-3"	120
H1	16	#6	2	15'-1"	362
H2	16	#6	2	15'-3"	366
H3	16	#6	3	15'-6"	372
H4	16	#6	3	15'-4"	368
K1	12	#4	STR	3'-1"	25
K2	12	#4	STR	19'-9"	158
S1	48	#4	4	10'-8"	342
S2	48	#4	5	3'-5"	110
S3	20	#4	6	7'-7"	101
U1	31	#4	7	3'-8"	76
V1	77	#4	STR	7'-8"	394
V2	62	#4	STR	5'-9"	238

REINFORCING STEEL (FOR ONE END BENT) 4489 LBS.

CLASS A CONCRETE BREAKDOWN (FOR ONE END BENT)

POUR #1 CAP, LOWER PART OF WINGS & COLLARS 21.8 C.Y.

POUR #2 BACKWALL & UPPER PART OF WINGS 7.6 C.Y.

TOTAL CLASS A CONCRETE 29.4 C.Y.

PROJECT NO. BR-0114

IREDELL COUNTY

STATION: 16+08.00 -L-

SHEET 4 OF 4

STATE OF NORTH CAROLINA
DEPARTMENT OF TRANSPORTATION
RALEIGH

SUBSTRUCTURE

END BENT No. 1 & 2 DETAILS

NORTH CAROLINA PROFESSIONAL ENGINEER SEAL 038640 J. WESLEY JONES 3/15/2020

STV 100 Years
STV ENGINEERS, INC.
900 West Trade St., Suite 715
Charlotte, NC 28202
NC License Number F-0991

DOCUMENT NOT CONSIDERED FINAL UNLESS ALL SIGNATURES COMPLETED

REVISIONS								SHEET NO.
NO.	BY:	DATE:	NO.	BY:	DATE:			S-13
1			3					TOTAL SHEETS
2			4					15

DRAWN BY :	WAW	DATE :	10-19
CHECKED BY :	JWJ	DATE :	12-19
DESIGN ENGINEER OF RECORD :	JWJ	DATE :	3-20

R:\Structures\ustation\Finals\40L025_BR-0114_SMU_E4_013_480165.dgn 4:37:24 PM 3/11/2020 JJones