PROJECT REFERENCE NO. 2021CPT.03.10.10672, Etc. | SHEET NO. 7

STATE OF NORTH CAROLINA
DEPT. OF TRANSPORTATION
DIVISION OF HIGHWAYS
RALEIGH, N.C.

ENGLISH DETAIL DRAWING FOR

MANHOLE AND VALVE BOX ADJUSTMENTS

SHEET 1 OF 1

840D55

GENERAL NOTES:

1. USE RAPID SET GROUT, MORTAR, OR CONCRETE THAT WILL TAKE FULL SET AND BECOME LOAD BEARING WITHIN SIXTY MINUTES OF PLACEMENT WITH A MINIMUM COMPRESSIVE STRENGTH OF 4000 PSI.
2. REMOVE ALL FAULTY EXISTING BRICKWORK AND REPLACE WITH NEW BRICK MASONRY.
3. SHEER CUT EXCAVATION FOR THE ADJUSTMENT ON ALL SIDES.
4. FILL AREA BELOW 8″ DEPTH WITH 78M OR NO. 57 CLEAN STONE.
5. MIX MORTAR TO NCDOT SPECIFICATIONS.
6. MORTAR JOINTS ½″ +/- ⅛″
7. CONSTRUCT AN ASPHALT RAMP IN ACCORDANCE WITH SECTION 858-3 OF THE 2018 STANDARD SPECIFICATIONS.

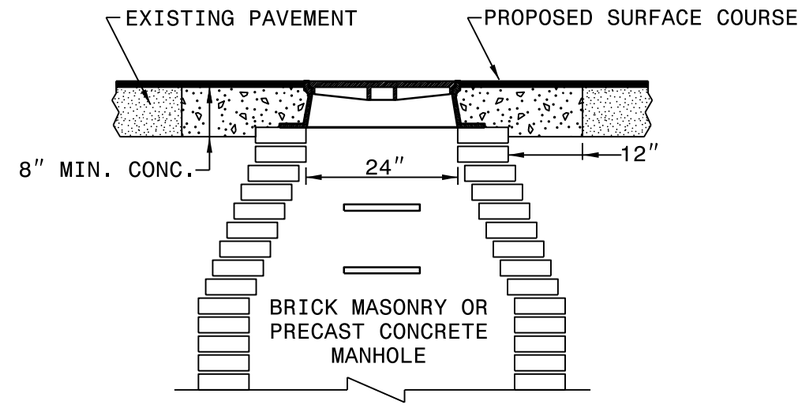

MANHOLE CONCRETE ENCASEMENT

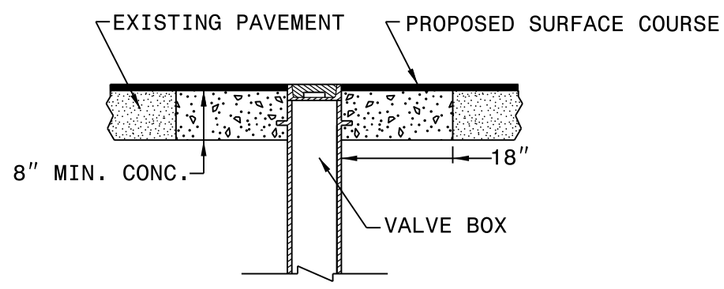

VALVE BOX CONCRETE ENCASEMENT

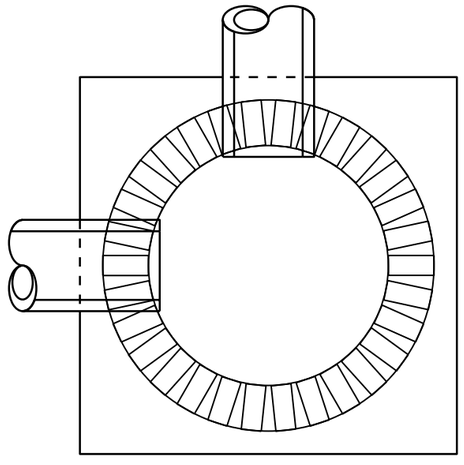

ELEVATION VIEW

PLACE BRICK ACCORDING TO ELEVATION VIEW

STATE OF NORTH CAROLINA
DEPT. OF TRANSPORTATION
DIVISION OF HIGHWAYS
RALEIGH, N.C.

ENGLISH DETAIL DRAWING FOR

MANHOLE AND VALVE BOX ADJUSTMENTS

SHEET 1 OF 1

840D55

REVISIONS

8/17/99

28-NOV-2017 10:19
S:\Division Resurfacing\z Design Standards & CADD\CADD_Spec.Dwg\Typicals,Curb,Etc...dgn
$$$$USERNAME$$$$