DocuSign Envelope ID: 7C3F9673-56C2-4841-8C6F-5752101B9F59

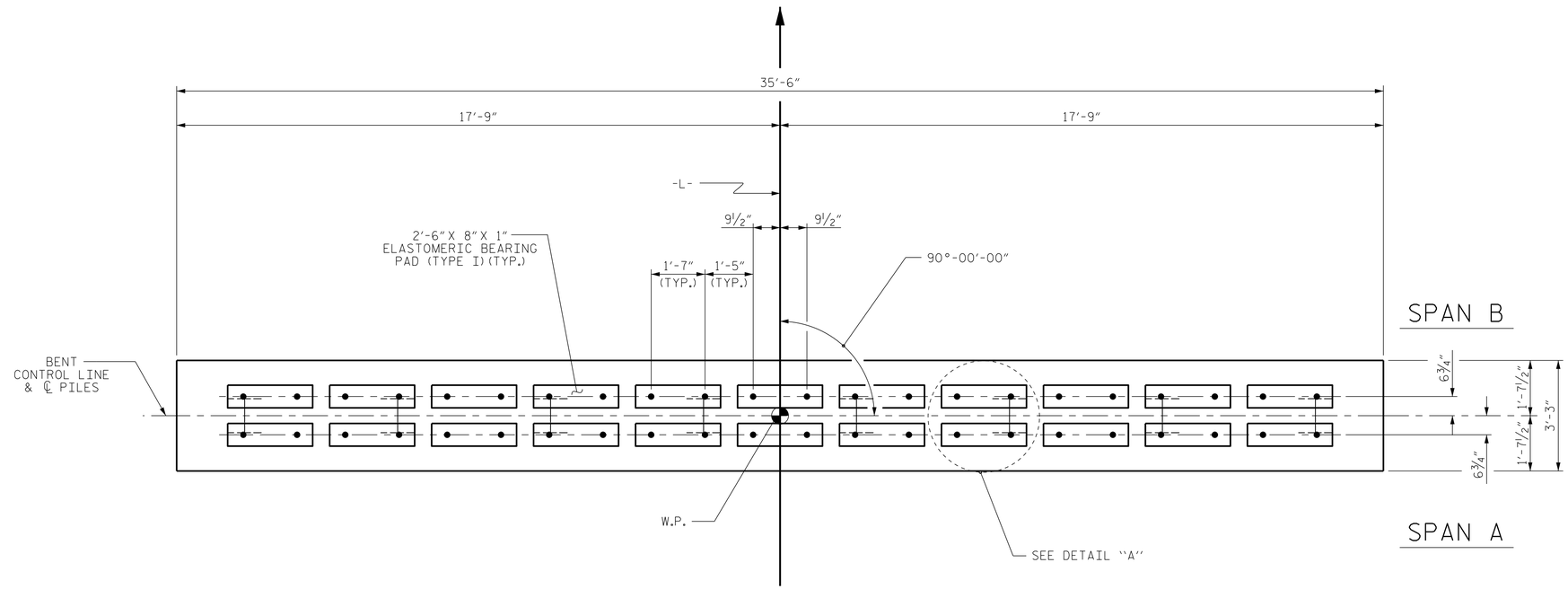

PLAN

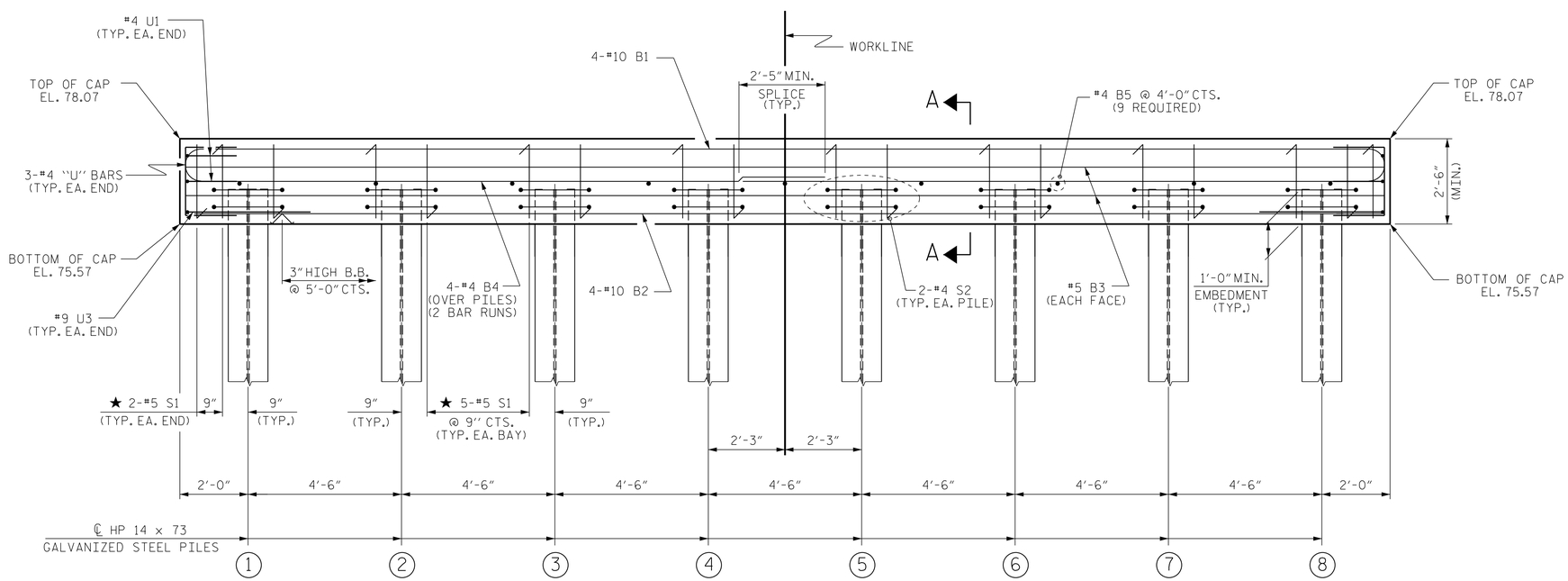

ELEVATION

FOR SECTION A-A, SEE SHEET 2 OF 2

NOTES

STIRRUPS IN CAP MAY BE SHIFTED AS NECESSARY TO CLEAR DOWELS.

★ INVERT ALTERNATE STIRRUPS.

GALVANIZE THE TOP OF EACH INTERIOR BENT PILE A MINIMUM OF 30 FEET. GALVANIZE IN ACCORDANCE WITH SECTION 1076 OF THE STANDARD SPECIFICATIONS.

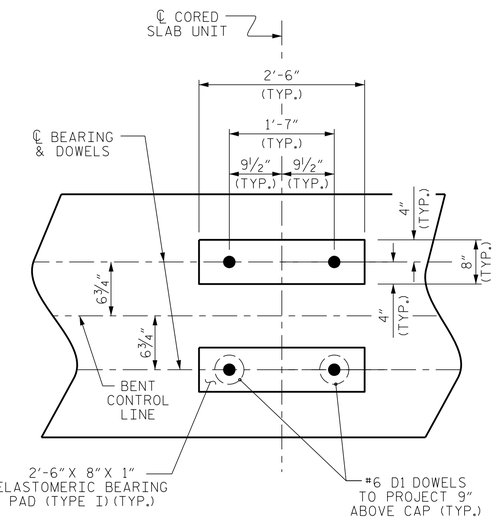

DETAIL "A"

(DIMENSIONS ARE TYPICAL EACH BEARING)

PROJECT NO. BR-0111

EDGECOMBE COUNTY

STATION: 35+90.50 -L-

SHEET 1 OF 2

ENGINEER OF RECORD
2/20/2020

NORTH CAROLINA PROFESSIONAL SEAL 22072 ENGINEER JOHN ARTHUR DILWORTH

DocuSigned by:
John Arthur Dilworth
621382280208438

WETHERILL ENGINEERING
1223 Jones Franklin Rd.
Raleigh, N.C. 27606
Bus: 919 851 8077
Fax: 919 851 8107
LICENSE NO. F-0377

STATE OF NORTH CAROLINA
DEPARTMENT OF TRANSPORTATION
RALEIGH

SUBSTRUCTURE

BENT No. 1

REVISIONS						SHEET NO.
NO.	BY:	DATE:	NO.	BY:	DATE:	S03-12
1			3			TOTAL SHEETS
2			4			17

ASSEMBLED BY : J. PENDERGRAFT DATE : 6-19
CHECKED BY : J. DILWORTH DATE : 8-19

DRAWN BY : DGE 05/10
CHECKED BY : MKT 05/10

REV. 6/17 MAA/THC

DOCUMENT NOT CONSIDERED FINAL UNLESS ALL SIGNATURES COMPLETED

STD. NO. 14" HP_BT_33_90S_<60'

P:\2019\191040.01 BR-0111\Structures\DGN\BRIDGE 3\BR0111_BR#3_STR_BT.dgn
12/19/2019 2:30:16 PM