DocuSign Envelope ID: 746FF4A6-A34C-478A-9AAF-F46CC825F93E

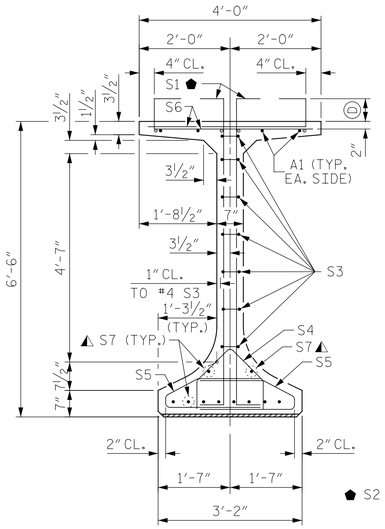

SECTION A-A

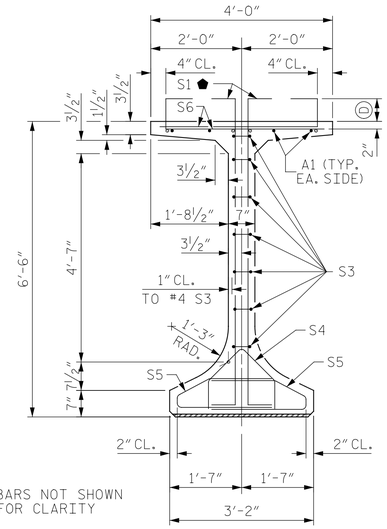

SECTION B-B

S2 BARS NOT SHOWN FOR CLARITY

FOR S7 BARS. SEE "DETAIL C" ON "78" FLORIDA I-BEAM (FIB) PRESTRESSED CONCRETE GIRDER CONTINUOUS FOR LIVE LOAD DETAILS" SHEET

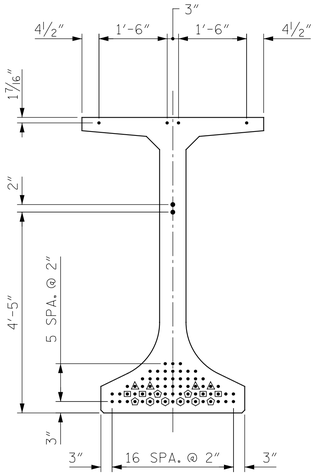

AT END OF GIRDER

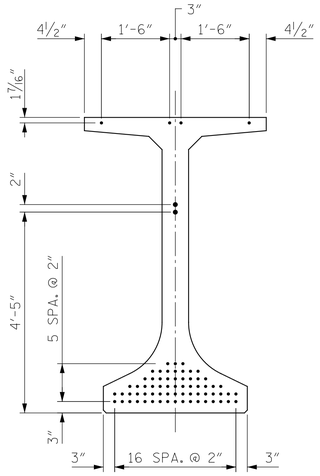

AT ℄ OF GIRDER

0.6"Ø LOW RELAXATION STRAND LAYOUT

BAR TYPES

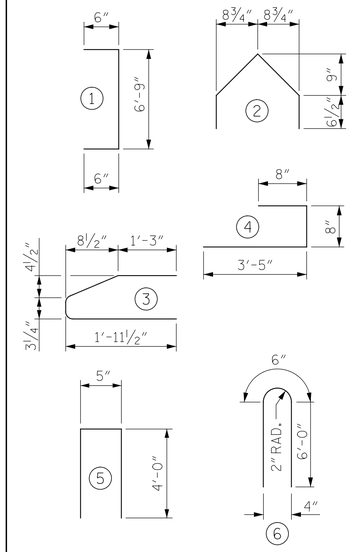

ALL BAR DIMENSIONS ARE OUT-TO-OUT

0.6"Ø L. R. GRADE 270 STRANDS

AREA (SQUARE INCHES)	ULTIMATE STRENGTH (LBS. PER STRAND)	APPLIED PRESTRESS (LBS. PER STRAND)
0.217	58,600	43,950

REINFORCING STEEL FOR ONE GDR

BAR	NO.	SIZE	TYPE	LENGTH	WEIGHT
A1	8	6	STR	28' - 0"	336
S1	332	5	1	7' - 9"	2,684
S2	16	5	STR	6' - 0"	100
S3	14	4	5	8' - 5"	79
S4	40	3	2	3' - 2"	48
S5	276	3	3	4' - 3"	441
S6	332	5	4	4' - 9"	1,645
◭ S7	10	5	STR	3' - 8"	38
S8	56	5	STR	3' - 8"	214
S9	8	5	6	12' - 6"	104
S10	16	4	STR	8' - 0"	86

QUANTITIES FOR ONE GIRDER

	REINFORCING STEEL	9000 PSI CONCRETE	0.6"Ø L.R. STRANDS
	LB.	C.Y.	No.
GDR DGX	5,775	40.7	72

GIRDERS REQUIRED

NUMBER	LENGTH	TOTAL LENGTH
9	143'-8"	1,293'-0"

◭ NOTE: S7 BARS SHALL BE BENT BEFORE SHIPMENT. HEAT BENDING SHALL NOT BE ALLOWED.

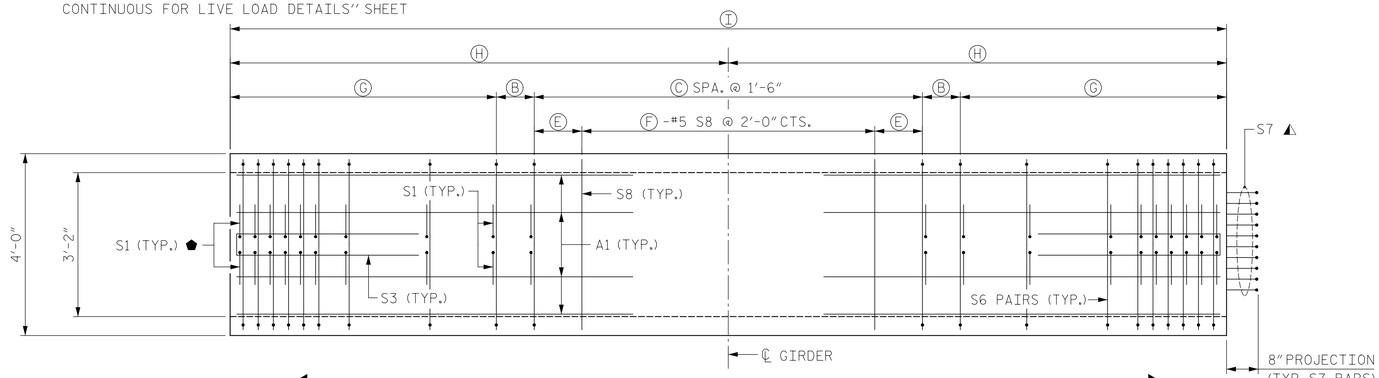

PLAN OF GIRDER

DEBONDING LEGEND

- ● FULLY BONDED STRANDS
- ◭ STRANDS DEBONDED FOR 4'-0" FROM END OF GIRDER
- ▣ STRANDS DEBONDED FOR 6'-0" FROM END OF GIRDER
- ⬟ STRANDS DEBONDED FOR 8'-0" FROM END OF GIRDER
- ⬢ STRANDS DEBONDED FOR 14'-0" FROM END OF GIRDER

TABLE OF VARIABLES

SPAN	Ⓐ	Ⓑ	Ⓒ	Ⓓ	Ⓔ	Ⓕ	Ⓖ	Ⓗ	Ⓘ	Ⓙ
D	27	1'-5"	75	6"	1'-3"	56	14'-2"	71'-10"	143'-8"	23'-8½"

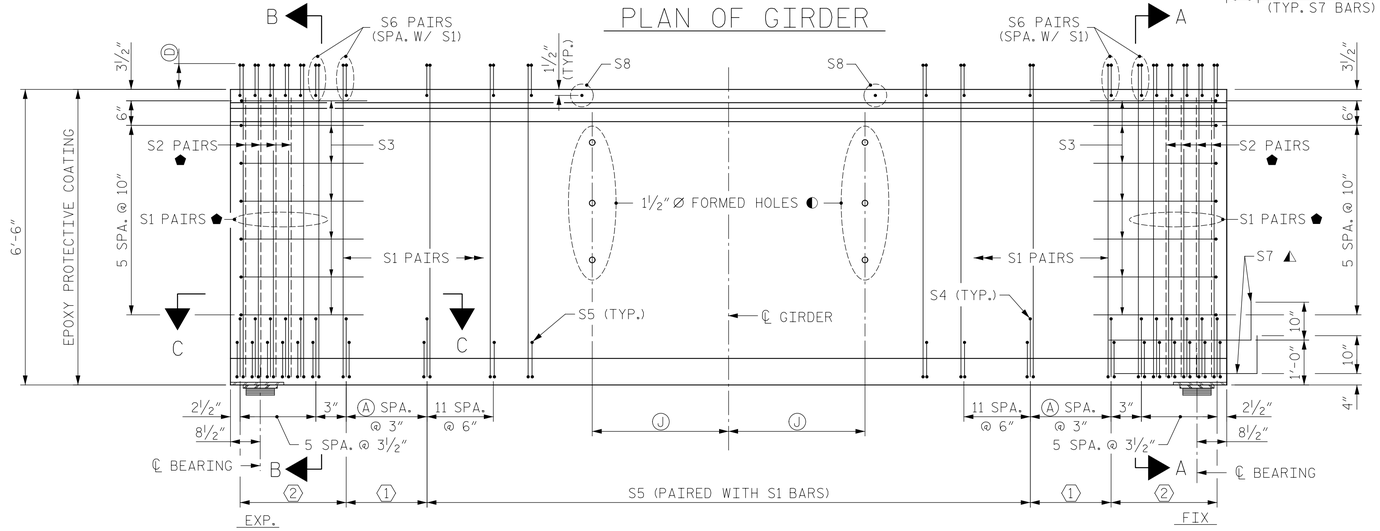

ELEVATION OF GIRDER

① 14-S4 & S5 PAIRS @ 6" CTS. (PAIRED WITH S1 BARS)

② S4 & S5 PAIRS (SPA. AS SHOWN) (PAIRED WITH S1 BARS)

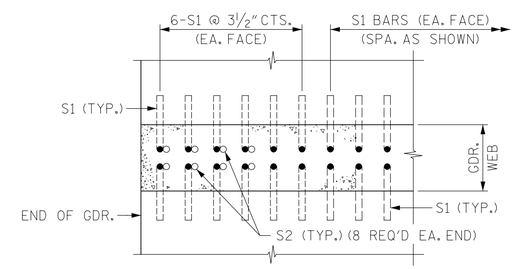

SECTION C-C
(TYP. EACH GIRDER END)

⬟ SEE "SECTION C-C" FOR MORE INFORMATION & DETAILS

◐ SEE "78" FLORIDA I-BEAM (FIB) PRESTRESSED CONCRETE GIRDER CONTINUOUS FOR LIVE LOAD DETAILS" SHEET FOR ADDITIONAL INFORMATION AND DETAILS.

S1 & S6 BARS MAY BE SHIFTED AS FOUND NECESSARY TO CLEAR 1½"Ø HOLES IN GIRDER WEB

PROJECT NO. 48793.3.1
BLADEN COUNTY
STATION: 118+81.78 -L-

SHEET 4 OF 8

STATE OF NORTH CAROLINA
DEPARTMENT OF TRANSPORTATION
RALEIGH

SUPERSTRUCTURE

78" FLORIDA I-BEAM (FIB) SPAN D

CONTINUOUS FOR LIVE LOAD PRESTRESSED CONCRETE GIRDER

NORTH CAROLINA PROFESSIONAL SEAL 20668 ENGINEER PAUL R. HOLSHOUSER
8/12/2020

DocuSigned by: Paul Holshouser
BE6A046516A143E...

ICE of CAROLINAS, PLLC
ICE of Carolinas, PLLC
4505 Falls of Neuse Road, Suite 110
Raleigh, North Carolina 27609
Phone: 803-822-0333
License #: P-0999

DOCUMENT NOT CONSIDERED FINAL UNLESS ALL SIGNATURES COMPLETED

REVISIONS							SHEET NO.
NO.	BY:	DATE:	NO.	BY:	DATE:		S-31
1			3				TOTAL SHEETS
2			4				107

DRAWN BY : B. J. MANTEI DATE : 7/16/20
CHECKED BY : N. REZAEI DATE : 7/16/20
DESIGN E.O.R. : P. R. HOLSHOUSER DATE : 7-23-20

Pen Table: \\192.168.64.12\Icerdu\RDUCAD\Plotting\Pen Tables\ICE_NC_Struct.tbl
Print Driver: \\192.168.64.12\Icerdu\RDUCAD\Plotting\NCDOT\22x34_PDF_ICE.pltcfg
Plotted: 8/11/2020 10:08:14 PM
Username: jim.austin
Filename: R:\Projects\19-77 Division 6 On Call\02 US 701 over Cape Fear River_NCDOT\Structures\Dwgs\Final\401_031_US_701_SMU_PCG_D_01.dgn