PROJECT REFERENCE NO.	SHEET NO.
I-5852A	6

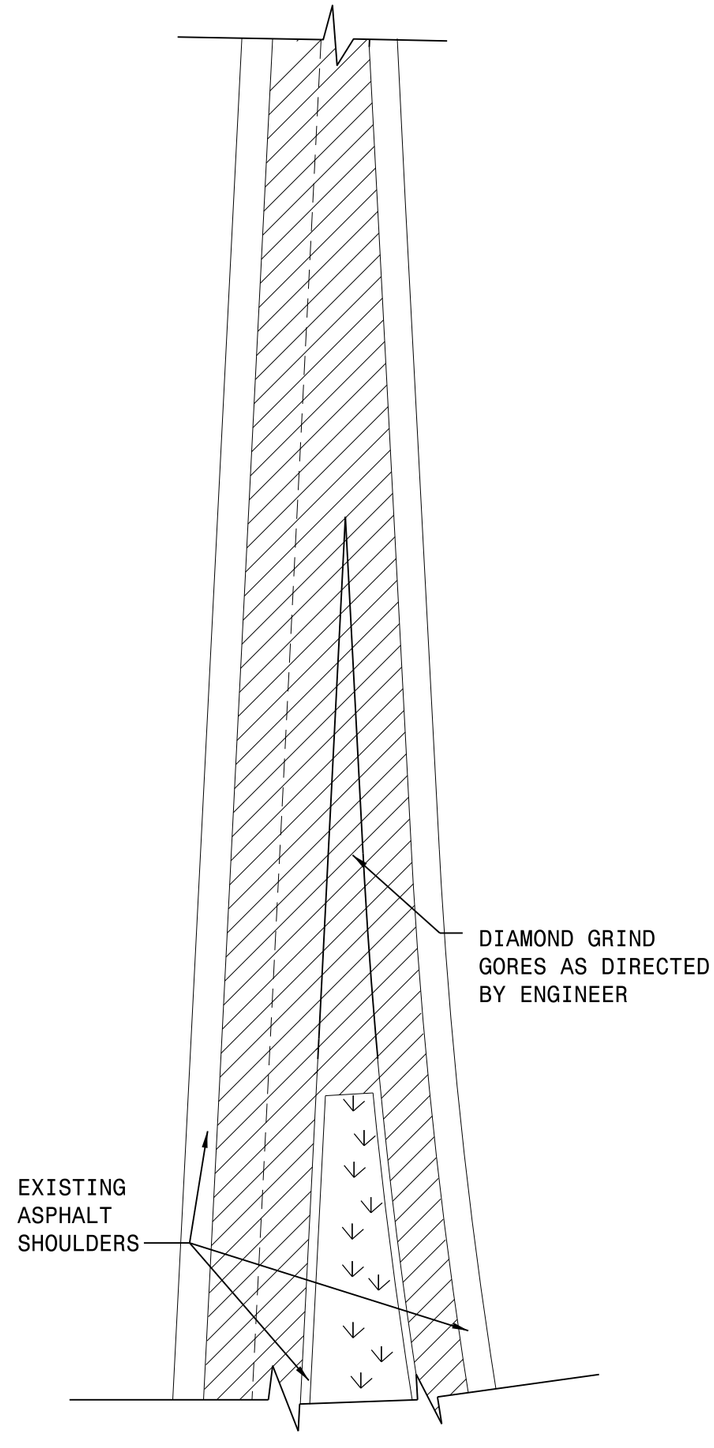

DETAIL FOR LIMITS OF MILLING AND DIAMOND GRINDING AT GORE AREAS

14-AUG-2018 15:55
S:\Contracts\Contracts\Resurfacing Projects\Division 7\I-5852A October 2018\first review returned\I-5852A typical3 Sht 6.dgn
powrochester AT CSD-2g2593