DocuSign Envelope ID: EDEA80FB-80A3-45F4-B6C8-CD80310DC6C8

PROJECT REFERENCE NO.	SHEET NO.
R-3825B	Sig. 16.1

EDI MODEL 2018ECL-NC CONFLICT MONITOR PROGRAMMING DETAIL

(remove jumpers and set switches as shown)

REMOVE DIODE JUMPERS 2-5, 2-6, 2-9, 2-11, 3-8, 3-10, 3-12, 4-8, 4-10, 4-12, 5-9, 5-11, 6-9, 6-11, 8-10, 8-12, 9-11 AND 10-12.

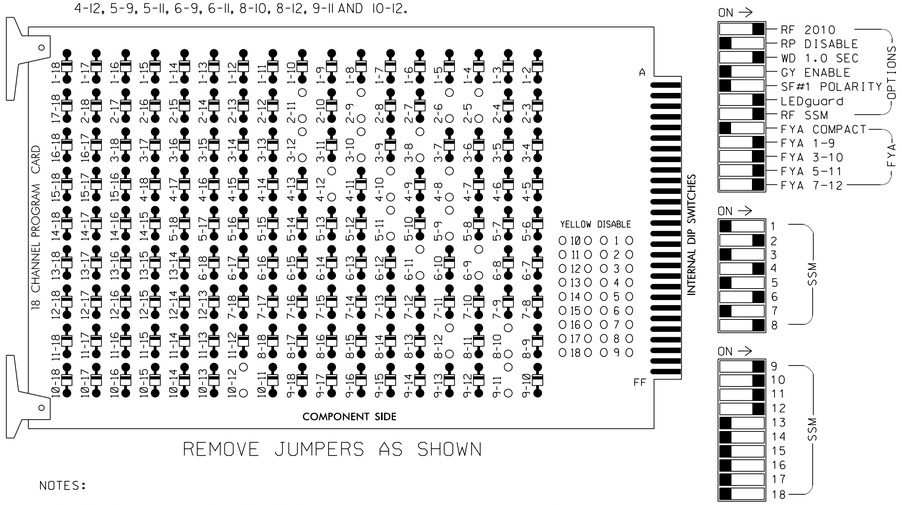

REMOVE JUMPERS AS SHOWN

NOTES:

1. Card is provided with all diode jumpers in place. Removal of any jumper allows its channels to run concurrently.
2. Ensure jumpers SEL2-SEL5 and SEL9 are present on the monitor board.
3. Ensure that Red Enable is active at all times during normal operation.
4. Connect serial cable from conflict monitor to comm. port 1 of 2070 controller. Ensure conflict monitor communicates with 2070.

NOTES

1. To prevent "flash-conflict" problems, insert red flash program blocks for all unused vehicle load switches in the output file. The installer shall verify that signal heads flash in accordance with the Signal Plans.
2. Program phases 4 and 8 for Dual Entry.
3. Enable Simultaneous Gap-Out for all Phases.
4. Program phases 2 and 6 for Gap Reduction.
5. Program phases 2 and 6 for Startup In Green.
6. Program phases 2 and 6 for Yellow Flash, and overlaps 1 and 2 as Wag Overlaps.

SIGNAL HEAD HOOK-UP CHART

LOAD SWITCH NO.	S1	S2	S3	S4	S5	S6	S7	S8	S9	S10	S11	S12	AUX S1	AUX S2	AUX S3	AUX S4	AUX S5	AUX S6
CMU CHANNEL NO.	1	2	13	3	4	14	5	6	15	7	8	16	9	10	17	11	12	18
PHASE	1	2	2 PED	3	4	4 PED	5	6	6 PED	7	8	8 PED	OLA	OLB	SPARE	OLC	OLD	SPARE
SIGNAL HEAD NO.	NU	21,22	NU	31★	42,43	NU	51★	62,63	NU	NU	81,82	NU	61★	31★	NU	51★	41★	NU
RED		128			101			134			107							
YELLOW		129		✳	102		✳	135			108							
GREEN		130			103			136			109							
RED ARROW													A121	A124		A114	A101	
YELLOW ARROW													A122	A125		A115	A102	
FLASHING YELLOW ARROW													A123	A126		A116	A103	
GREEN ARROW				118			133											

NU = Not Used

✳ Denotes install load resistor. See load resistor installation detail this sheet.

★ See pictorial of head wiring in detail below.

EQUIPMENT INFORMATION

CONTROLLER.....2070
CABINET.....332 W/ AUX
SOFTWARE.....ECONOLITE OASIS
CABINET MOUNT.....BASE
OUTPUT FILE POSITIONS...18 WITH AUX. OUTPUT FILE
LOAD SWITCHES USED.....S2,S4,S5,S7,S8,S11,AUX S1, AUX S2,AUX S4,AUX S5
PHASES USED.....2,3,4,5,6,8
OVERLAP "A".....2
OVERLAP "B".....3+4
OVERLAP "C".....5+6
OVERLAP "D".....8

FYA SIGNAL WIRING DETAIL

(wire signal heads as shown)

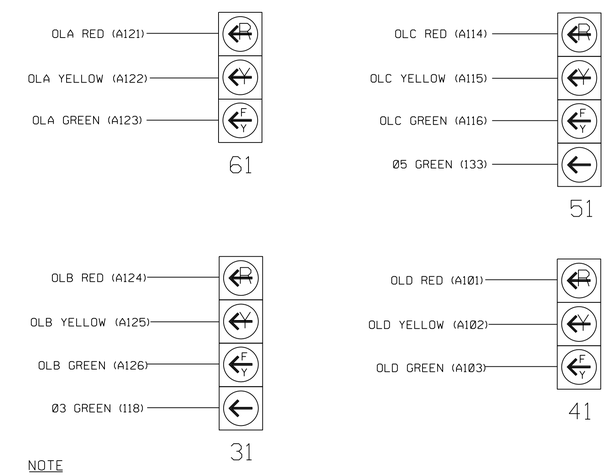

NOTE

The sequence display for signal heads 31 and 51 requires special logic programming. See sheet 2 for programming instructions.

INPUT FILE POSITION LAYOUT

(front view)

		1	2	3	4	5	6	7	8	9	10	11	12	13	14
FILE "I"	U	SLOT	SLOT	SLOT	SLOT	SLOT	SLOT	SLOT	SLOT	SLOT	SLOT	SLOT	SLOT	SLOT	FS DC ISOLATOR
	L	EMPTY	EMPTY	EMPTY	EMPTY	EMPTY	EMPTY	EMPTY	EMPTY	EMPTY	EMPTY	EMPTY	EMPTY	EMPTY	ST DC ISOLATOR
FILE "J"	U	SLOT	SLOT	SLOT	SLOT	SLOT	SLOT	SLOT	SLOT	SLOT	SLOT	SLOT	SLOT	SLOT	SLOT
	L	EMPTY	EMPTY	EMPTY	EMPTY	EMPTY	EMPTY	EMPTY	EMPTY	EMPTY	EMPTY	EMPTY	EMPTY	EMPTY	EMPTY

EX.: 1A, 2A, ETC. = LOOP NO.'S

FS = FLASH SENSE
ST = STOP TIME

INPUT FILE POSITION LEGEND: J2L

FILE J
SLOT 2
LOWER

SPECIAL DETECTOR NOTE

Install a video detection system for vehicle detection. Perform installation according to manufacturer's directions and NCDOT engineer-approved mounting locations to accomplish the detection schemes shown on the Signal Design Plans.

LOAD RESISTOR INSTALLATION DETAIL

(install resistors as shown below)

ACCEPTABLE VALUES

VALUE (ohms)	WATTAGE
1.5K - 1.9K	25W (min)
2.0K - 3.0K	10W (min)

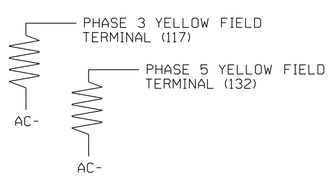

THIS ELECTRICAL DETAIL IS FOR
THE SIGNAL DESIGN: 04-0874T1
DESIGNED: January 2018
SEALED: 5/25/2018
REVISED: N/A

Temporary Design 1 (TMP Phase I & II)
Electrical Detail - Sheet 1 of 2

DOCUMENT NOT CONSIDERED FINAL UNLESS ALL SIGNATURES COMPLETED

Prepared by
URS
URS Corporation – North Carolina
1600 Perimeter Park Drive
Morrisville, North Carolina 27560
TELEPHONE (919) 461-1100 FAX (919) 461-1415
NC LICENSE • C-2243

ELECTRICAL AND PROGRAMMING DETAILS FOR:

Prepared for the Offices of:
Intelligent Transportation Mobility and Safety Division
State of North Carolina
Department of Transportation
Traffic & Signals Management Section
750 N.Greenfield Pkwy.Garner,NC 27529

NC 42
at
SR 1003 (Buffalo Road)

Division 4 Johnston County Clayton

PLAN DATE: January 2018	REVIEWED BY: J O Deaton		
PREPARED BY: M W Yalch	REVIEWED BY:		
REVISIONS		INIT.	DATE

NORTH CAROLINA PROFESSIONAL SEAL 07438 ENGINEER JAMES O. DEATON

DocuSigned by: James O Deaton 40FF8AC430BD40F... 5/25/2018

SIG. INVENTORY NO. 04-0874T1

5/25/2018
L:\Morrisville\Jobs\R3825B\Traffic\Signals\Electricals\04-0874T1e-00-192.dgn
coxs1