DocuSign Envelope ID: 2AA28B1E-010E-47D3-AE41-230AB0F47E26

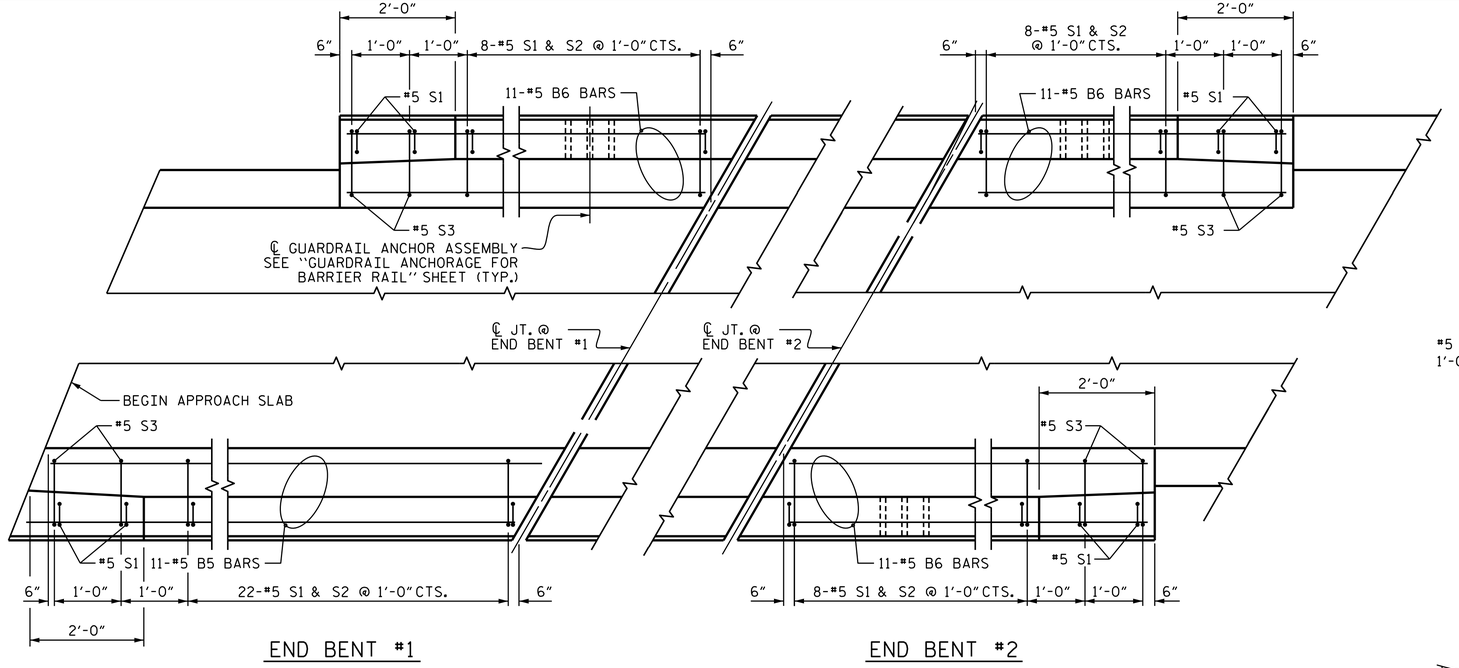

END BENT #1

END BENT #2

PLAN OF BARRIER RAIL

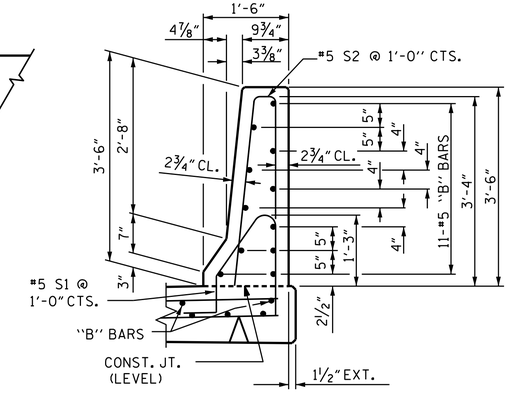

SECTION THRU RAIL

BAR TYPES

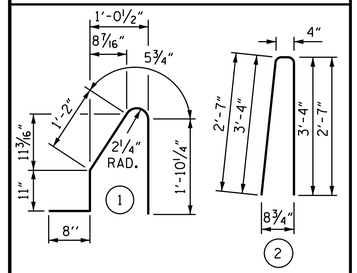

ALL BAR DIMENSIONS ARE OUT TO OUT

BILL OF MATERIAL

BARRIER RAIL ONLY

BAR	NO.	SIZE	TYPE	LENGTH	WEIGHT
* B5	11	#5	STR	24'-8"	283
* B6	33	#5	STR	9'-6"	327
* S1	54	#5	1	5'-1"	286
* S2	46	#5	2	7'-0"	336
* S3	8	#5	2	5'-6"	46

* EPOXY COATED REINFORCING STEEL 1278

CLASS AA CONCRETE 7.7 C. Y.

CONCRETE BARRIER RAIL 57.0 LIN. FT.

NOTES

THE COST OF THE BARRIER RAIL ON THE APPROACH SLAB SHALL BE INCLUDED IN THE LINEAR FOOT CONTRACT PRICE BID FOR "CONCRETE BARRIER RAIL".

THE BARRIER RAIL ON EACH APPROACH SLAB SHALL NOTBE CAST UNTIL ALL APPROACH SLAB CONCRETE HAS BEEN CAST AND HAS REACHED A MINIMUM COMPRESSIVE STRENGTH OF 3,000 PSI.

ALL REINFORCING STEEL IN BARRIER RAILS SHALL BE EPOXY COATED.

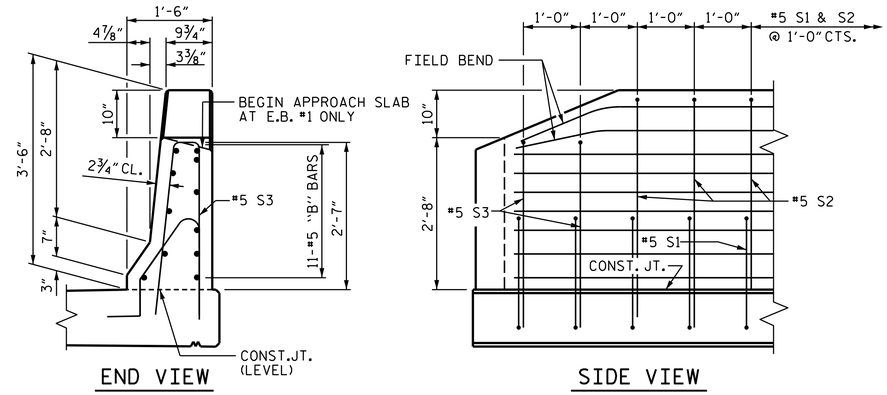

END VIEW

END VIEW

SIDE VIEW

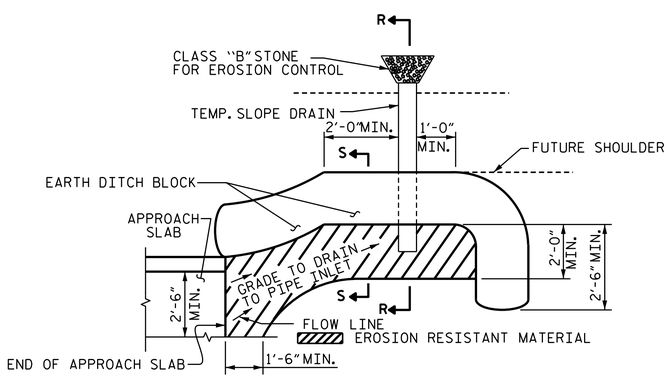

NOTE: IMMEDIATELY AFTER THE CONSTRUCTION OF THE APPROACH SLAB, THE CONTRACTOR SHALL PROVIDE TEMPORARY BERM AND SLOPE DRAIN. CONTRACTOR SHALL GRADE TO PIPE INLET AND PROVIDE EROSION RESISTANT MATERIAL AS SHOWN. THE EROSION RESISTANT MATERIAL SHALL BE EITHER 1) ASPHALT PLANT MIX, TYPE 1 OR TYPE 2, MIN. 2" DEPTH, 2) EROSION CONTROL MAT, OR 3) CONCRETE, AS DIRECTED BY THE ENGINEER. THE SLOPE DRAIN SHALL CONSIST OF A NON-PERFORATED TEMPORARY DRAINAGE PIPE, 12 INCHES IN DIAMETER.

PLAN VIEW

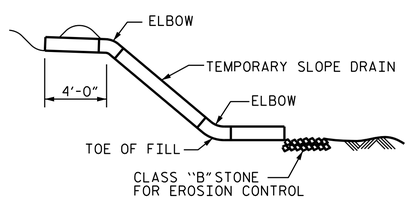

SECTION R-R

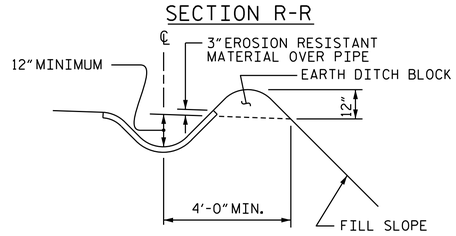

SECTION S-S

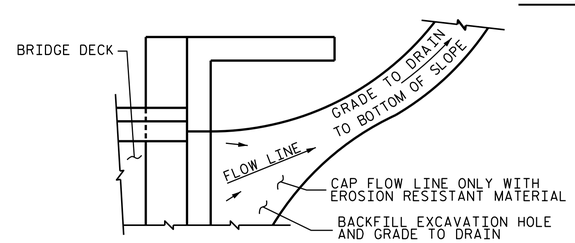

NOTE: IF THE APPROACH SLAB IS NOT CONSTRUCTED IMMEDIATELY AFTER THE BACKFILLING OF THE END BENT EXCAVATION, GRADE TO DRAIN TO THE BOTTOM OF THE SLOPE AND PROVIDE EROSION RESISTANT MATERIAL, SUCH AS FIBERGLASS ROVING OR AS DIRECTED BY THE ENGINEER TO PREVENT SOIL EROSION AND TO PROTECT THE AREA ADJACENT TO THE STRUCTURE. THE CONTRACTOR WILL BE REQUIRED TO REMOVE THESE MATERIALS PRIOR TO CONSTRUCTION OF THE APPROACH SLAB.

TEMPORARY DRAINAGE DETAIL

TEMPORARY BERM AND SLOPE DRAIN DETAILS

(TO BE USED WHEN SHOULDER BERM GUTTER IS REQUIRED)

PROJECT NO. U-4405

CUMBERLAND COUNTY

STATION: 26+78.00 -RPB-

STATE OF NORTH CAROLINA
DEPARTMENT OF TRANSPORTATION
RALEIGH

STANDARD

BRIDGE APPROACH SLAB DETAILS

NORTH CAROLINA PROFESSIONAL SEAL 043571 ENGINEER SAMUEL L. CULLUM

DocuSigned by: Samuel L Cullum 19C97095C75A467...

6/6/2018 12:30:46 PM PDT

DOCUMENT NOT CONSIDERED FINAL UNLESS ALL SIGNATURES COMPLETED

REVISIONS						SHEET NO.
NO.	BY:	DATE:	NO.	BY:	DATE:	S-25
1			3			TOTAL SHEETS
2			4			26

STD. NO. BAS4

KCA KISINGER CAMPO & ASSOCIATES
4800 SIX FORKS ROAD SUITE 120
RALEIGH, NC 27609
(919) 882-7839

ASSEMBLED BY : J. B. HANNA DATE : 05-17
CHECKED BY : L. MARTINEZ DATE : 05-17

DRAWN BY : FCJ 11/88
CHECKED BY : ARB 11/88

REV. 10/1/11 MAA/GM
REV. 7/12 MAA/GM
REV. 6/13 MAA/GM

6/6/2018
Z:\Tampa\FDOT\42015I2.06_NC-U4405\Structures\401_125_U4405_SMU_AS2_250440.dgn
Usersscullum