DocuSign Envelope ID: 199DFD23-A899-420C-9818-0BA056D062A6

PROJECT REFERENCE NO.	SHEET NO.
I-5714 / U-5114	SCP. 17

10–1619
SR 2136 (GILEAD RD) AT I–77 NB RAMPS

LEGEND

COLOR CODE TIA/EIA 598–C

(1)	BLUE	(7)	RED
(2)	ORANGE	(8)	BLACK
(3)	GREEN	(9)	YELLOW
(4)	BROWN	(10)	VIOLET
(5)	SLATE	(11)	ROSE
(6)	WHITE	(12)	AQUA

X = NEW FUSION SPLICE INDIVIDUAL FIBER
● = EXISTING FUSION SPLICE
C = CAP AND SEAL
EXPRESS = EXPRESS ENTIRE BUFFER TUBE THROUGH WITHOUT CUTTING
BUFFER SPLICE = SPLICE ALL FIBERS IN BUFFER TUBE COLOR TO COLOR

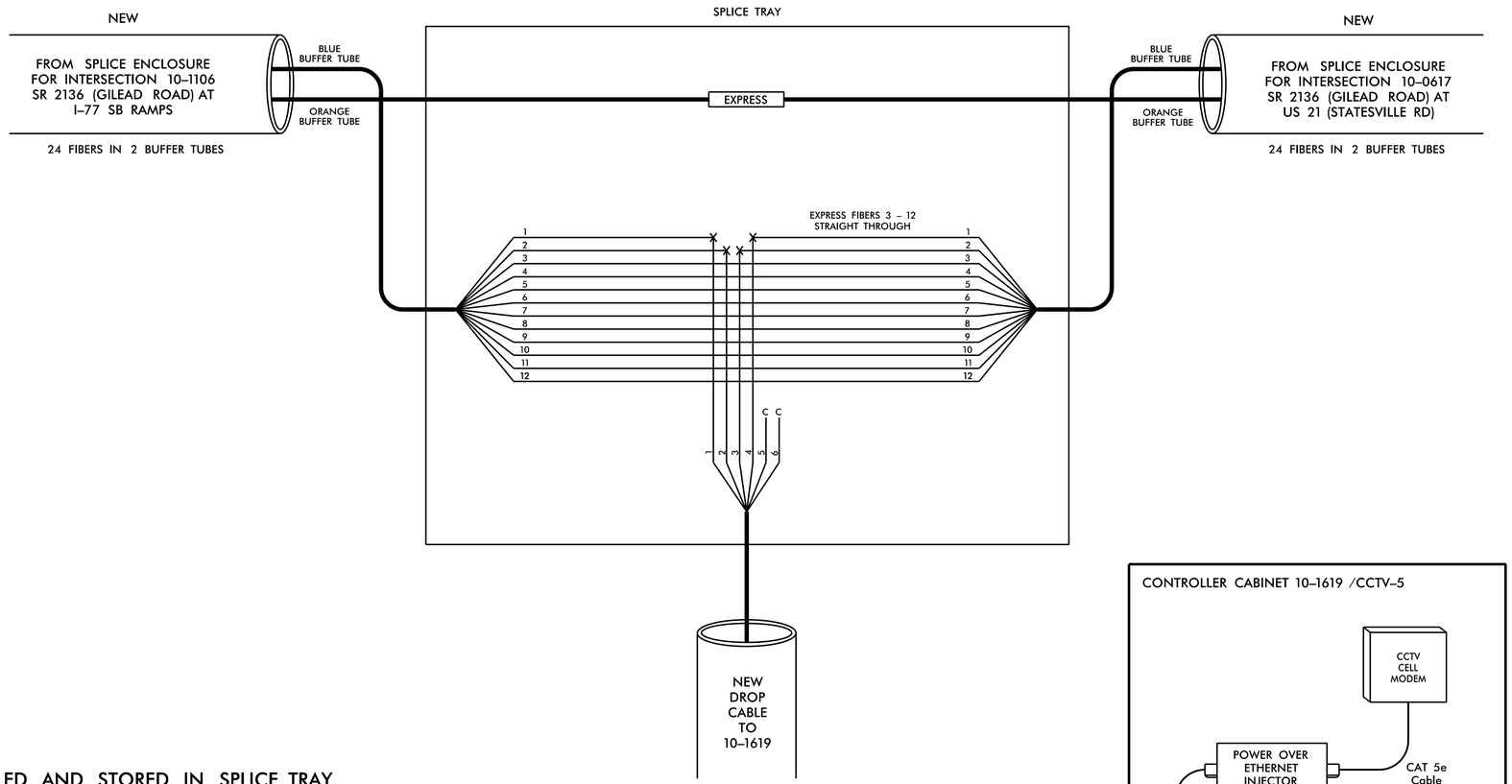

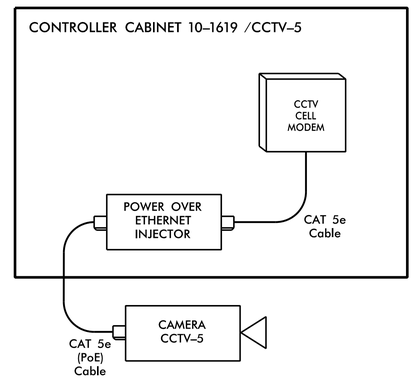

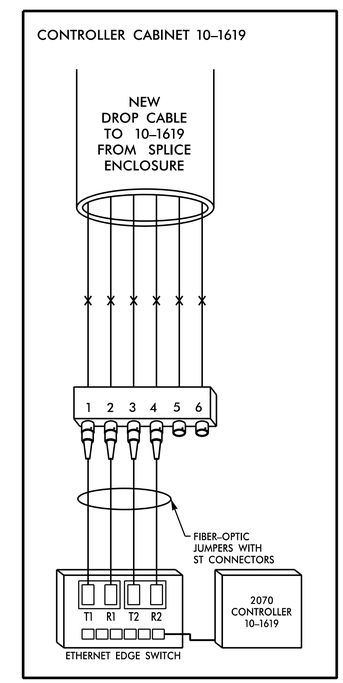

NOTES:

1. UNUSED FIBERS LEFT COILED AND STORED IN SPLICE TRAY.
2. UNUSED BUFFER TUBES LEFT COILED AND STORED IN SPLICE TRAY.
3. TRANSCEIVER TERMINATION CONFIGURATIONS ARE GENERIC. CONTRACTOR IS RESPONSIBLE FOR DETERMINING / ENSURING PROPER TERMINATION.
4. INCLUDE ON THE COVER OF EACH SPLICE TRAY THE FOLLOWING: REFERENCE SECTION 1731 "FIBER OPTIC SPLICE ENCLOSURE"

   (1) SPLICE
   (2) DATE
   (3) COMPANY NAME
   (4) NAME OF INDIVIDUAL PERFORMING THE SPLICING

   PRIOR TO INSTALLING THE COVER ON THE SPLICE TRAY, TAKE A DIGITAL PHOTOGRAPH SHOWING THE SPLICE TRAY AND INFORMATION SHOWN ABOVE (1–4) AND SUBMIT PHOTOGRAPH ALONG WITH OTDR TEST RESULTS.

HNTB
HNTB NORTH CAROLINA, P.C.
343 E. Six Forks Road, Suite 200
Raleigh, North Carolina 27609
NC License No: C-1554
(919) 546-8997

DOCUMENT NOT CONSIDERED FINAL UNLESS ALL SIGNATURES COMPLETED

Plans Prepared for:
Transportation Mobility and Safety Division
Intelligent Transportation Systems Section
750 N. Greenfield Pkwy., Garner, NC 27529

SPLICE DETAILS

Division 10 Mecklenburg Co. Huntersville

PLAN DATE:	January 2018	REVIEWED BY:	A.D. Klinksiek
PREPARED BY:	T.R. Terrell	REVIEWED BY:	N.R. Simmons

SCALE: NONE

REVISIONS	INIT.	DATE

SEAL
NORTH CAROLINA PROFESSIONAL SEAL 031464 ENGINEER NATASHA R. SIMMONS

DocuSigned by: Natasha R. Simmons 4/23/2018
F6DA88DF3AD445A
SIGNATURE DATE

CADD Filename: I5714_U5114_SCP-17.dgn