DocuSign Envelope ID: 6D31AE38-6FE0-4CB8-B82C-83F3E76DC8BA

PROJ. REFERENCE NO.	SHEET NO.
R-3825B	TMP-40

HDR Engineering, Inc. of the Carolinas
555 Fayetteville St, Suite 900 Raleigh, N.C. 27601
N.C.B.E.L.S. License Number: F-0116

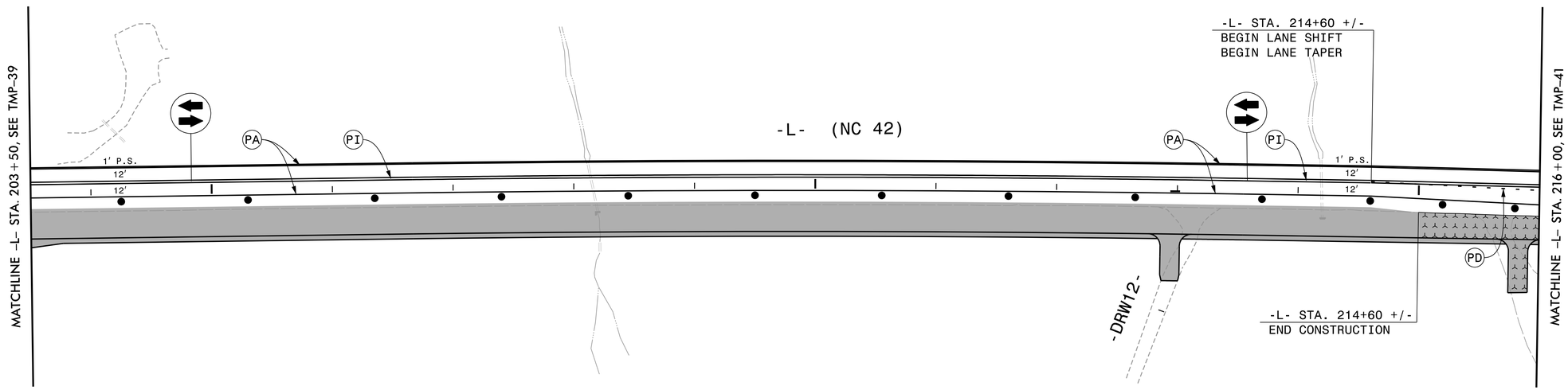

APPROVED: Michelle Ward

DATE: 6/6/2018

SEAL

NORTH CAROLINA PROFESSIONAL SEAL 033789 ENGINEER MICHELLE WARD

DOCUMENT NOT CONSIDERED FINAL UNLESS ALL SIGNATURES COMPLETED

DIVISION OF HIGHWAYS · STATE OF NORTH CAROLINA · DEPARTMENT OF TRANSPORTATION · WORK ZONE TRAFFIC CONTROL

PHASE 1 - STEP 2

REVISIONS

PLOT DRIVER: NCDOT_pdf_color_eng_50.plt PENTABLE: NCDOT_tcp.tbl
USER: BSCOTT DATE: 6/5/2018 TIME: 11:27:40 AM
FILE: pw:\\pwhdruseas01:HDR_US_East_01\Documents\3322\10001376\10051231\6.0_CAD_BIM\6.2_Work_In_Progress\Traffic\TrafficControl\TCP\R3825B_TC_TMP-40.dgn