NOTES

STIRRUPS IN CAP MAY BE SHIFTED AS NECESSARY TO CLEAR DOWELS.

★ INVERT ALTERNATE STIRRUPS.

FOR ADDITIONAL REINFORCING STEEL IN PP 18 x 0.50 GALVANIZED STEEL PILES, SEE SHEET 3 OF 3.

GALVANIZE THE TOP OF EACH INTERIOR BENT PILE A MINIMUM OF 24.0 FEET. GALVANIZE IN ACCORDANCE WITH SECTION 1076 OF THE STANDARD SPECIFICATIONS.

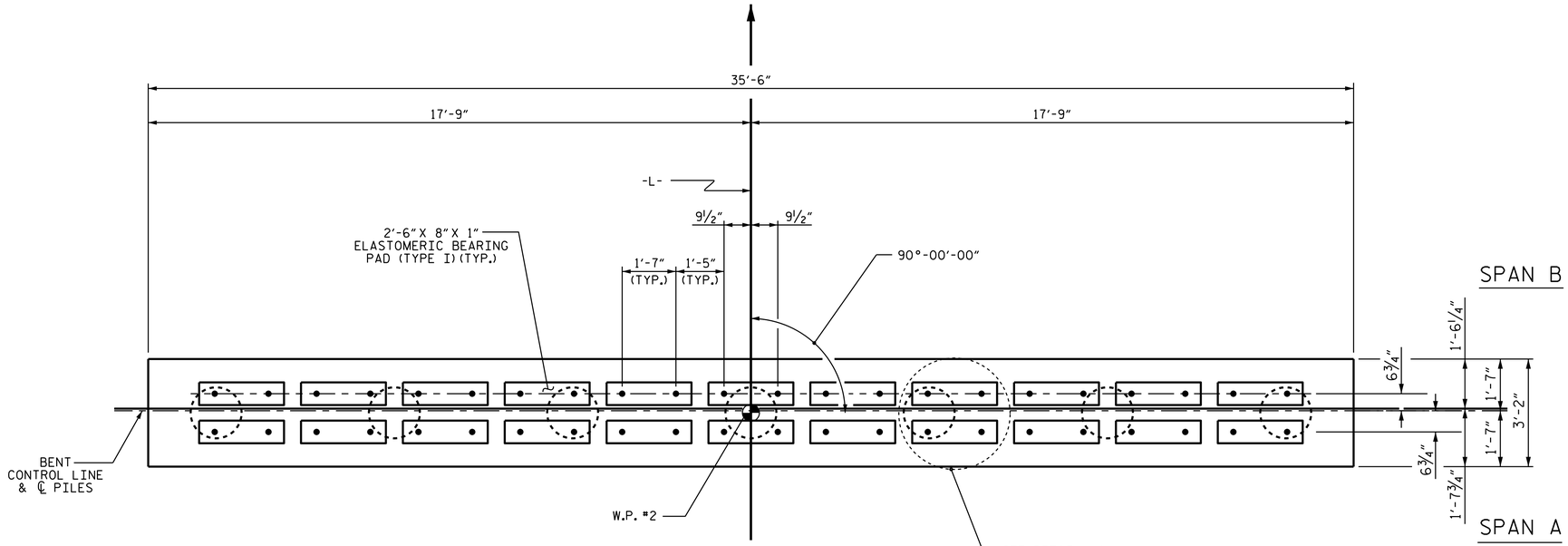

PLAN

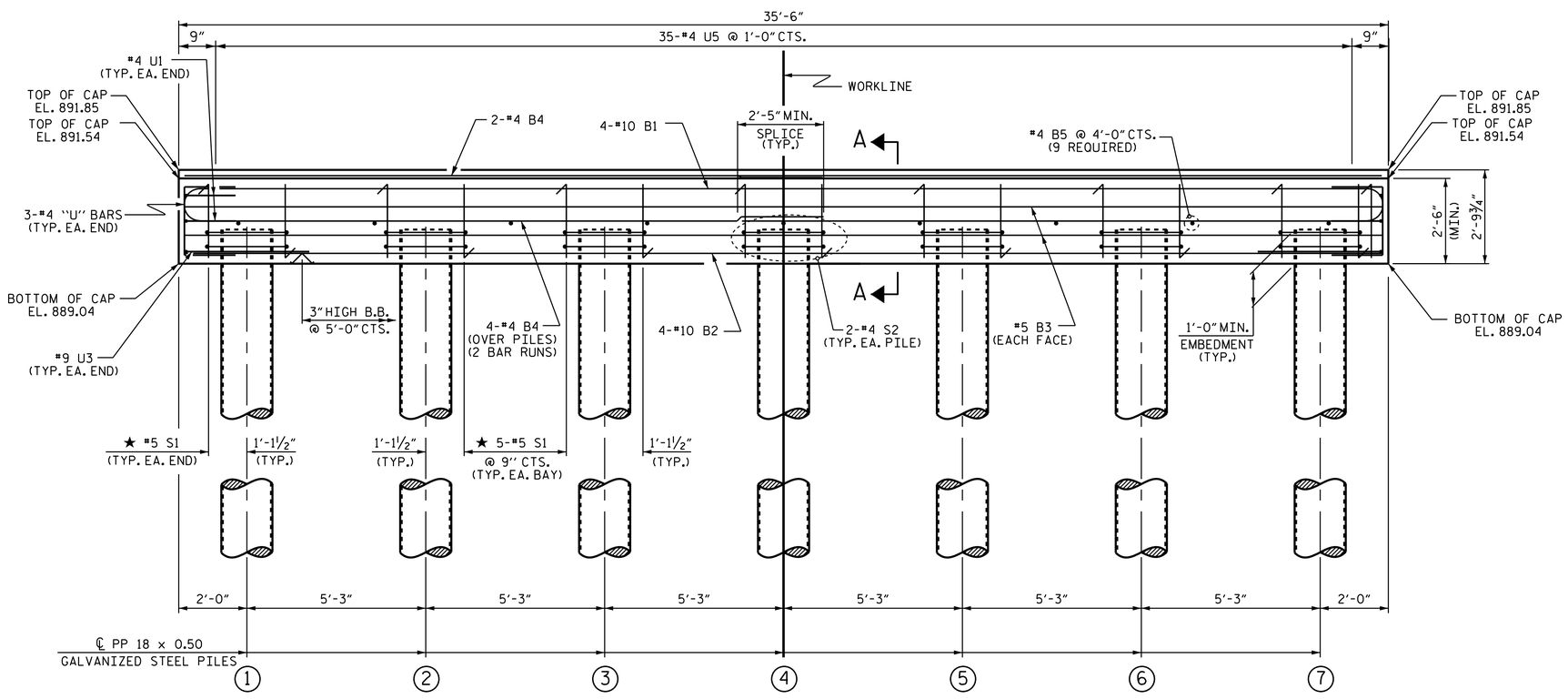

ELEVATION

FOR SECTION A-A, SEE SHEET 2 OF 3

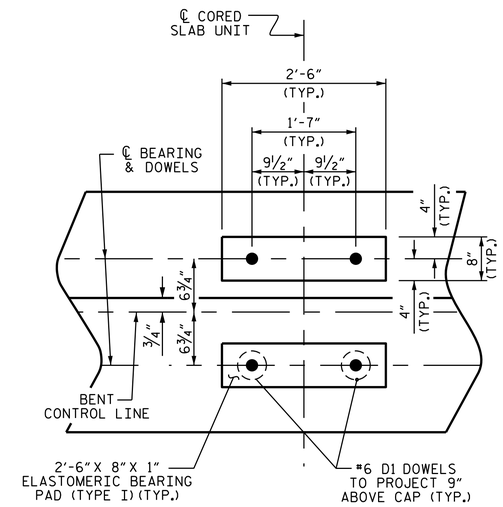

DETAIL "A"

(DIMENSIONS ARE TYPICAL EACH BEARING)

PROJECT NO. B-5407

POLK COUNTY

STATION: 13+52.00 -L-

SHEET 1 OF 3

STATE OF NORTH CAROLINA
DEPARTMENT OF TRANSPORTATION
RALEIGH

SUBSTRUCTURE

BENT 1

NORTH CAROLINA PROFESSIONAL SEAL 031021 ENGINEER AMBER M. LEE

DocuSigned by: Amber Lee
B04B5A4F2FAD484...
3/6/2018

DOCUMENT NOT CONSIDERED FINAL UNLESS ALL SIGNATURES COMPLETED

REVISIONS						SHEET NO.
NO.	BY:	DATE:	NO.	BY:	DATE:	S-20
1			3			TOTAL SHEETS
2			4			24

ASSEMBLED BY :	A. GODFREY	DATE :	10/27/17
CHECKED BY :	G. KOUCHEKI	DATE :	12/13/17
DRAWN BY :	DGE 06/10	REV. 6/17	MAA/THC
CHECKED BY :	MKT 06/10		

01-MAR-2018 15:07
R:\Structures\Finalplans\401_039_B5407_SMU_ B1_1_020_740034.dgn
amlee