DocuSign Envelope ID: AB431D9E-26E6-44FE-9DB6-0157EE03BA3E

8/17/99

REVISIONS

BRIDGE/ PAVEMENT RELATIONSHIP SKETCH

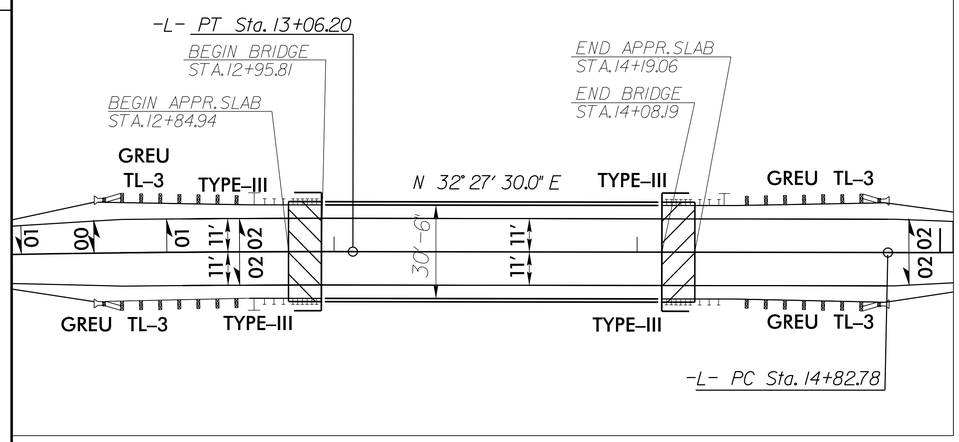

-L-

PI Sta 11+79.96	PI Sta 15+51.12
Δ = 2° 31' 30.0" (RT)	Δ = 1° 01' 30.0" (LT)
D = 0° 59' 59.7"	D = 0° 44' 59.8"
L = 252.52'	L = 136.68'
T = 126.28'	T = 68.34'
R = 5,730.00'	R = 7,640.00'
SE = 2%	SE = NC
Ro = 48'	VD = 50 mph
VD = 50 mph	

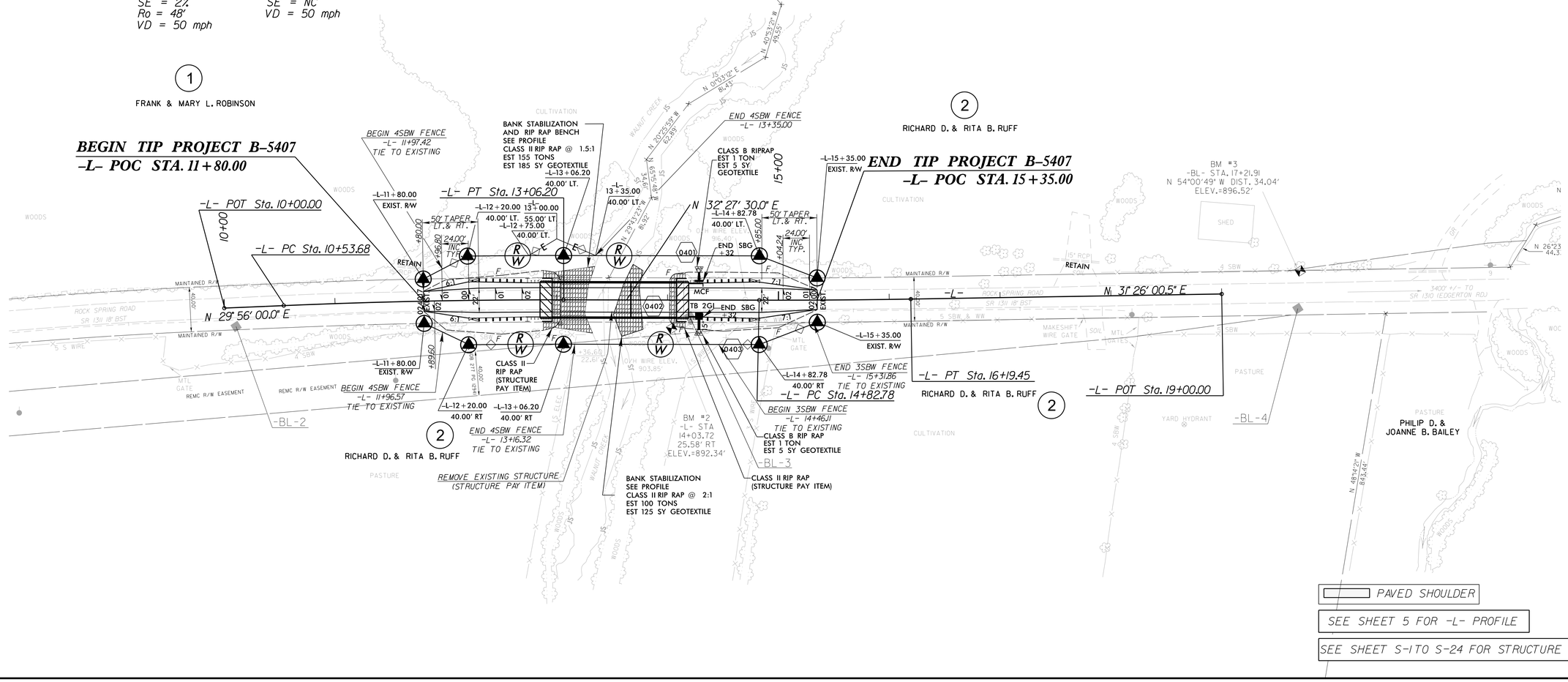

LOCHNER

H. W. LOCHNER, INC.
2840 PLAZA PLACE, SUITE 202
RALEIGH, NC 27612
(919)571-7111
NC License Number F-0159

ECOLOGICAL ENGINEERING
NC FIRM LICENSE No: F-1148
1151 SE Cary Parkway
Suite 101
Cary, NC 27518
(919) 557-0929

PROJECT REFERENCE NO.	SHEET NO.
B-5407	4
R/W SHEET NO.	

ROADWAY DESIGN ENGINEER
NORTH CAROLINA PROFESSIONAL SEAL 25523 ENGINEER BRIAN K. EASON
DocuSigned by: Brian K. Eason
9AF015AD7ACC48F...
3/14/2018

HYDRAULICS ENGINEER
NORTH CAROLINA PROFESSIONAL SEAL 039102 ENGINEER BRANDON C. BARNHAM
DocuSigned by: Brandon C. Barnham
C7351A57E0F0499...
3/14/2018

DOCUMENT NOT CONSIDERED FINAL UNLESS ALL SIGNATURES COMPLETED

3/14/2018
B-5407_RDY_PSH04.dgn
cwickel