DocuSign Envelope ID: 05B3233B-1D44-4144-ACA6-6A8623A6FC43

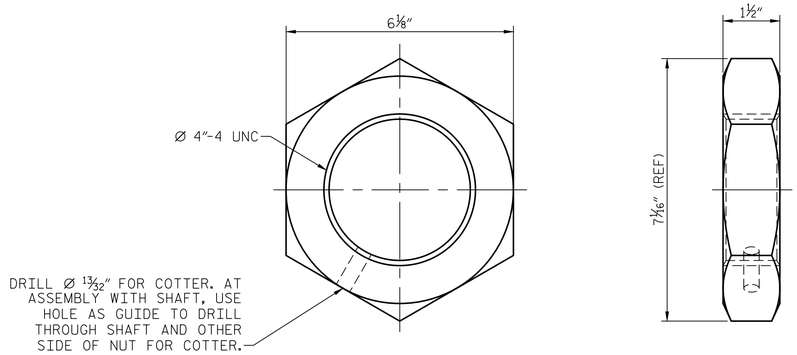

M07 LOCK NUT
SCALE: 6"=1'-0"

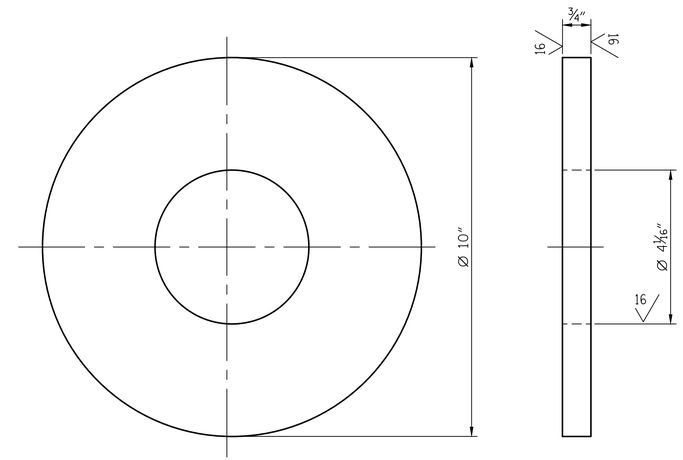

M08 10" THRUST WASHER
SCALE: 6"=1'-0"

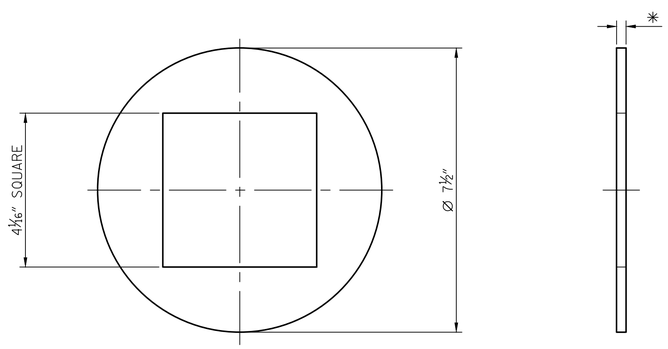

M05 SHIM
SCALE: 6"=1'-0"

* EACH SHIM PACK SHALL BE PROVIDED WITH THE FOLLOWING THICKNESSES

QTY:	THICKNESS:
1	¼"
1	⅛"
1	1/16"
1	1/32"
2	1/64"

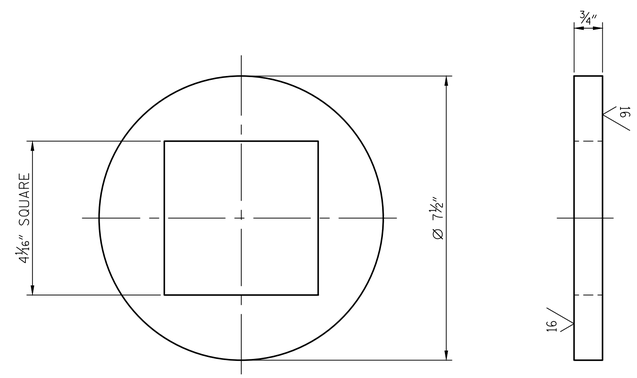

M06 7 1/2" THRUST WASHER
SCALE: 6"=1'-0"

PROJECT NO. 15BPR.15
NEW HANOVER COUNTY
STATION:

STATE OF NORTH CAROLINA
DEPARTMENT OF TRANSPORTATION
RALEIGH

AUX. COUNTERWEIGHT ASSEMBLY DETAILS - 3

MODJESKI and MASTERS
Experience great bridges.
333 FAYETTEVILLE STREET, SUITE 505
RALEIGH, NC 27601
NC LICENSE NO. C-2979

NORTH CAROLINA PROFESSIONAL SEAL 044302 ENGINEER LEE LENTZ
01/29/18
DocuSigned by: lee lentz
26BC7CBEBBFE4C6...

DOCUMENT NOT CONSIDERED FINAL UNLESS ALL SIGNATURES COMPLETED

DESIGNED BY:	E. A. SAMPLE	DATE :	08/17/17
DRAWN BY:	J. M. SHOUP	DATE :	08/17/17
CHECKED BY:	L. R. LENTZ	DATE :	01/25/18
DESIGN ENGINEER OF RECORD:	L. R. LENTZ	DATE :	01/25/18

REVISIONS

NO.	BY:	DATE:	NO.	BY:	DATE:
1			3		
2			4		

SHEET NO. MA-5
TOTAL SHEETS 10(A)

LAST SAVED 1/24/2018 4:26 PM BY EASAMPLE. LAST PLOTTED 1/29/2018 10:29 AM.
FILE: \\nmdc10\projects\3682.01\CADD\Mechanical\MA-5 AUX. COUNTERWEIGHT ASSEMBLY DETAILS - 3