GENERAL PLAN NOTES:

1. PROVIDE PLENUM RATED CABLE ABOVE CEILINGS.
2. PROVIDE CABLE IN CONDUIT IN ALL EXPOSED AREAS.

DRAWING NOTES:

(1) COORDINATE EXACT REQUIREMENTS WITH ELEVATOR MANUFACTURER.

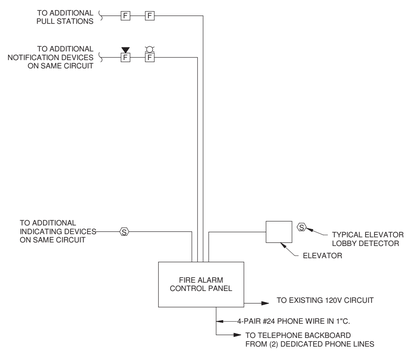

NOTE:
1. NUMBER AND SIZE OF CONDUCTORS AND CONDUIT SHALL BE AS RECOMMENDED BY MANUFACTURER.
2. ALL RELAYS REQUIRED SHALL BE ADDRESSABLE.
3. FURNISH AND INSTALL 20A/1P BREAKER IN NEAREST EXISTING PANEL (RUN 2#12, 1#12GRD IN 3/4"C) FOR POWERING CONTROL PANEL. BREAKER SHALL BE COMPATIBLE WITH EXISTING PANEL. BREAKER AIC RATING SHALL MATCH EXISTING.

2 / E3.1 FIRE ALARM RISER DIAGRAM
NO SCALE

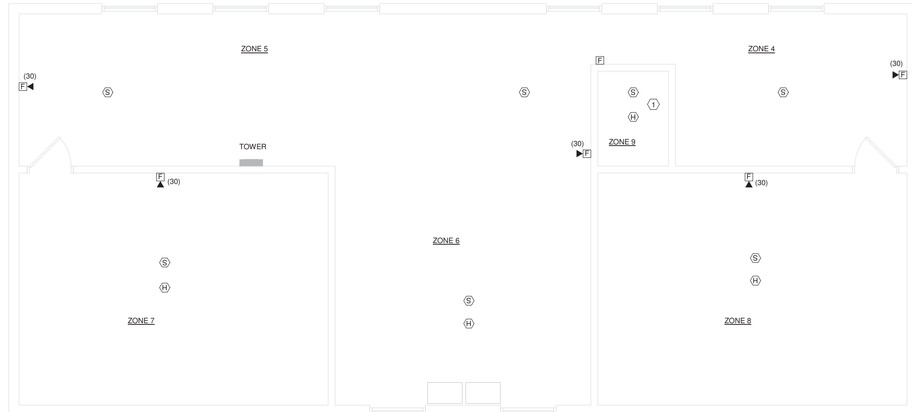

TOWER PLAN

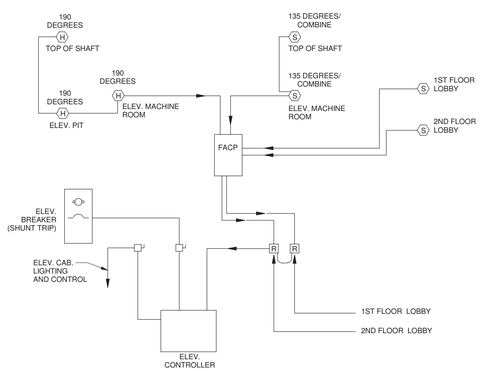

3 / E3.1 ELEVATOR RECALL AND DETECTION DETAIL (1)
NO SCALE

NOTE:

UNLESS NOTED OTHERWISE, ALL ELECTRICAL DEVICES AND EQUIPMENT ARE EXISTING TO REMAIN.

CONTROL HOUSE PLAN

1 / E3.1 CONTROL HOUSE AND TOWER PLANS - FIRE ALARM
1/4" = 1'-0"

100% CONSTRUCTION DOCUMENTS

ALL REPORTS, PLANS SPECIFICATIONS AND COMPUTER FILES RELATING TO THIS PROJECT ARE THE PROPERTY OF CRABTREE, ROHRBAUGH & ASSOCIATES. CRABTREE, ROHRBAUGH & ASSOCIATES RETAINS ALL COMMON LAW, STATUTE AND OTHER RIGHTS, INCLUDING THE COPYRIGHT, IN THE PROJECT. REPRODUCTION OF THE MATERIAL HEREIN OR SUBSTANTIAL USE WITHOUT WRITTEN PERMISSION OF CRABTREE, ROHRBAUGH & ASSOCIATES VIOLATES THE COPYRIGHT LAWS OF THE UNITED STATES AND WILL BE SUBJECT TO LEGAL PROSECUTION.
© CRABTREE, ROHRBAUGH & ASSOCIATES, INC 2017

REVISIONS

	MM.DD.YR	NAME	DESCRIPTION OF CHANGES

CRABTREE ROHRBAUGH & ASSOCIATES - ARCHITECTS
401 EAST WINDING HILL ROAD
MECHANICSBURG PA 17055
717-458-0272 FAX 717-458-0047
250 WEST MAIN STREET, SUITE 200
CHARLOTTESVILLE VA 22902
434-975-7262 FAX 434-975-7263
www.cra-architects.com

RENOVATIONS TO
CAPE FEAR RIVER MEMORIAL LIFT BRIDGE
NORTH CAROLINA DEPT. OF TRANSPORTATION

CENTERPOINT ENGINEERING, INC.
2 MARKET PLAZA WAY
MECHANICSBURG, PA 17055
PHONE: (717) 795-8575
FAX: (717) 795-9110
COPYRIGHT © 2017

NORTH CAROLINA PROFESSIONAL SEAL 045985 ENGINEER JOHN B. LEWIS 12/20/17

DESIGNED BY: GLM | FUNCTIONAL LEAD: JBL | PROJECT NO. 17066

FLOOR PLANS - FIRE ALARM

PLOT SCALE: As indicated

FILENAME: 17066 Memorial Bridge NC Revit-17 ELECT.rvt

DATE: DECEMBER 20, 2017

PROJECT 15BPR.15

E3.1