DocuSign Envelope ID: 1ACE3258-B4E6-41D5-8054-E6A64965A6D0

STV 100 Years
STV Engineers, Inc.
900 West Trade St., Suite 715
Charlotte, NC 28202
NC License Number F-0991

PROJECT REFERENCE NO.	SHEET NO.
U-4751	2D-3
R/W SHEET NO.	

HYDRAULICS ENGINEER

NORTH CAROLINA PROFESSIONAL SEAL 029388 ENGINEER EDWARD J. VANCE

Edward J. Vance
E2067281B3D5EA...
8/10/2017

DOCUMENT NOT CONSIDERED FINAL UNLESS ALL SIGNATURES COMPLETED

DETAIL 57

WET DETENTION BASIN OUTLET STRUCTURE

NOT TO SCALE

SEE PLAN SHEET 6

NOTES:
1. TOP ELEVATION OF CONTROL STRUCTURE (WEIR ELEVATION) SHOULD BE SET AT THE WQv ELEVATION.
2. SET DRAWDOWN DEVICE INLET PIPE INVERT (MIDDLE PRONG OF 4" PVC TEE) AT THE PERMANENT POOL ELEVATION
3. 15" MINIMUM DIAMETER FOR OUTLET PIPE.
4. 2" MINIMUM DIAMETER ORIFICE.
5. NO BEDDING MATERIAL TO BE USED. THEREFORE, DO NOT FOLLOW STANDARD DRAWINGS FOR METHOD OF PIPE INSTALLATION FOR OUTLET PIPE THROUGH EMBANKMENT.
6. SLUICE GATE IS FOR MAINTENANCE AND SHOULD REMAIN CLOSED DURING NORMAL OPERATION. A GATE VALVE MAY BE USED IN LIEU OF THE 8" SLUICE GATE.
7. SLUICE GATE SHALL PROVIDE WATERTIGHT SEAL. PROVIDE ADEQUATE CLEARANCE FOR GATE OPERATION AND FOR PROPER SEATING OF GATE OVER PIPE.
8. SELECT BOX STANDARD AS REQUIRED TO ACCOMMODATE SLUICE GATE AND ORIFICE TRASH RACK WIDTH.
9. ENSURE TRASH RACK OPENS FREELY AND WITHOUT INTERFERENCE WITH SLUICE GATE.
10. ADJUST FOOTER DIMENSIONS AS NEEDED FOR ANTI-FLOTATION.
11. TRASH RACK IS INCIDENTAL TO THE MASONRY DRAINAGE STRUCTURE.

MINIMUM DIMENSIONS FOR WET DETENTION BASIN OUTLET STRUCTURE

STATION	STRUCTURE NUMBER	S (INCHES) 6" MIN.	B (INCHES) 6" MIN.	PERM. POOL ELEVATION (FEET)	TOP ELEV. CTL. STR./ WQV ELEV. (FEET)	INV. ELEV. CTL. STR. (FEET)	CTL. STR. DIMENSIONS (W x L x H) (FEET)	CONCRETE BALLAST THICKNESS (T) (INCHES)	ORIFICE DIAMETER (O) (INCHES)	ORIFICE INV. ELEV. (FEET)	NUMBER OF DRAWDOWN DEVICES	OUTLET PIPE DIAMETER(P) (INCHES)
-L- 37+16 RT	0697	6	6	39.20	40.70	**35.00**	4 x 4 x 5.7	12	3	**39.20**	3	30

PLAN VIEW

TRASH RACK NOT SHOWN FOR CLARITY

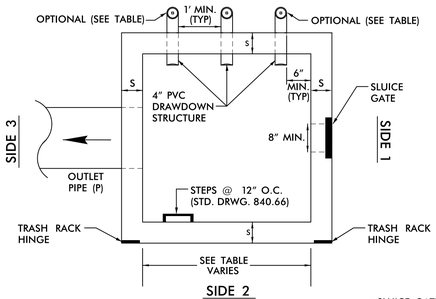

SIDE 2

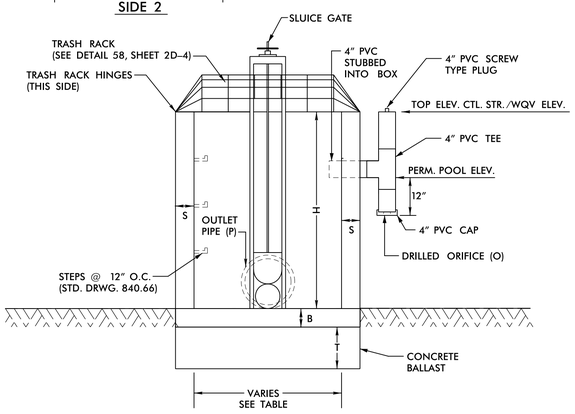

SIDE 1

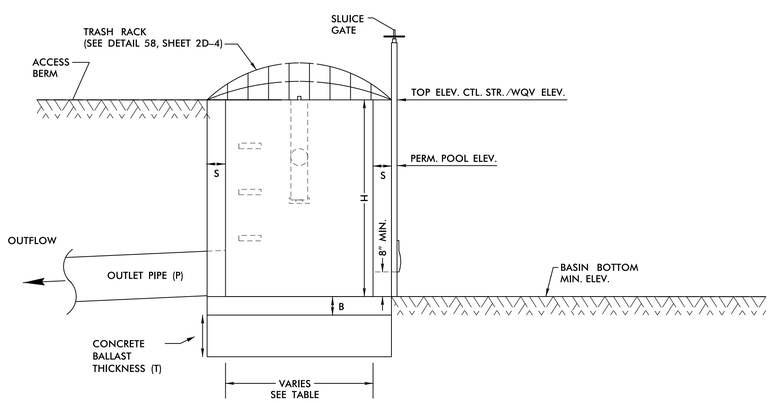

SIDE 2

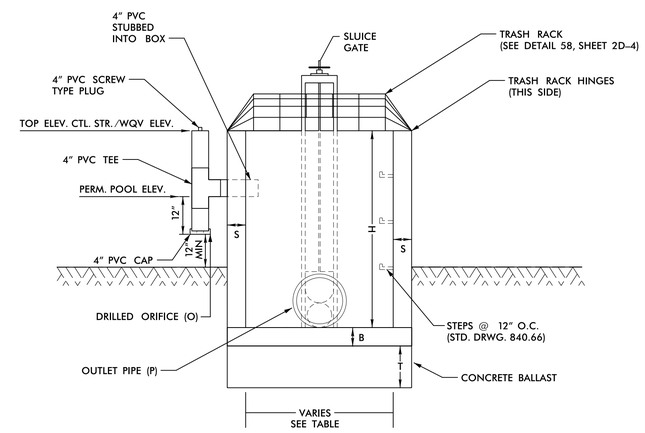

SIDE 3

8/8/2017
R:\Roadway\Proj\SHT\U4751_RDY_psh02D-03.dgn
stephens