DocuSign Envelope ID: 21E4535A-E6DE-4A37-A135-0255E02B4F5F

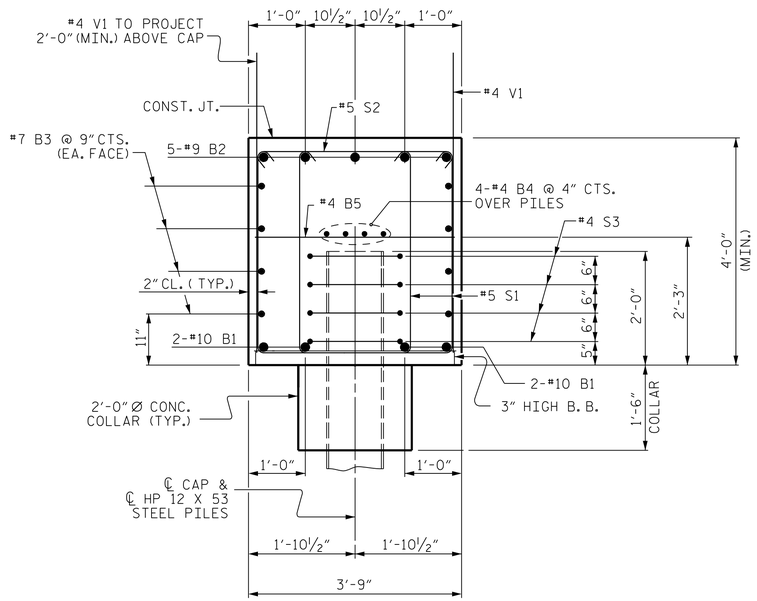

SECTION A-A

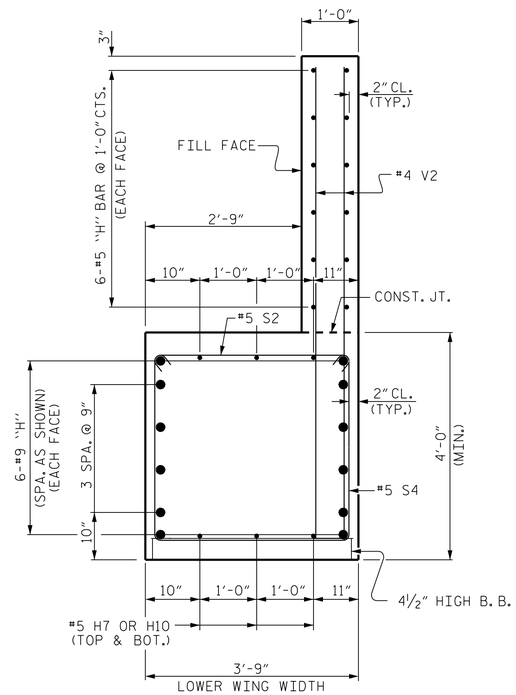

SECTION X-X

BILL OF MATERIAL

FOR ONE END BENT
(2 REQUIRED)

BAR	NO.	SIZE	TYPE	LENGTH	WEIGHT
B1	4	#10	1	51'-0"	878
B2	5	#9	1	50'-6"	859
B3	8	#7	STR	47'-6"	777
B4	8	#4	STR	25'-0"	134
B5	12	#4	STR	3'-5"	27
H1	6	#5	4	10'-0"	63
H2	6	#5	4	9'-9"	61
H3	6	#5	5	14'-7"	91
H4	6	#5	5	14'-10"	93
H5	6	#9	4	13'-10"	282
H6	6	#9	4	12'-9"	260
H7	6	#5	STR	10'-0"	63
H8	6	#9	5	18'-4"	374
H9	6	#9	5	19'-5"	396
H10	6	#5	STR	15'-6"	97
K1	24	#4	STR	3'-9"	60
S1	106	#5	2	10'-11"	1207
S2	75	#5	3	4'-4"	339
S3	32	#4	6	6'-6"	139
S4	22	#5	2	10'-9"	247
V1	66	#4	STR	6'-1"	268
V2	93	#4	STR	9'-8"	601

REINFORCING STEEL = 6,307 LBS

CLASS A CONCRETE:

POUR #1:
CAP, LOWER WINGS & COLLARS = 40.7 C.Y.

POUR #2:
UPPER WINGS = 6.6 C.Y.

TOTAL 47.3 C.Y.

HP 12 X 53 STEEL PILES :

No. 8	LIN. FT.	440
PILE REDRIVES	EA.	4
PILE DRIVING EQUIP. SETUP	EA.	8

BAR TYPES

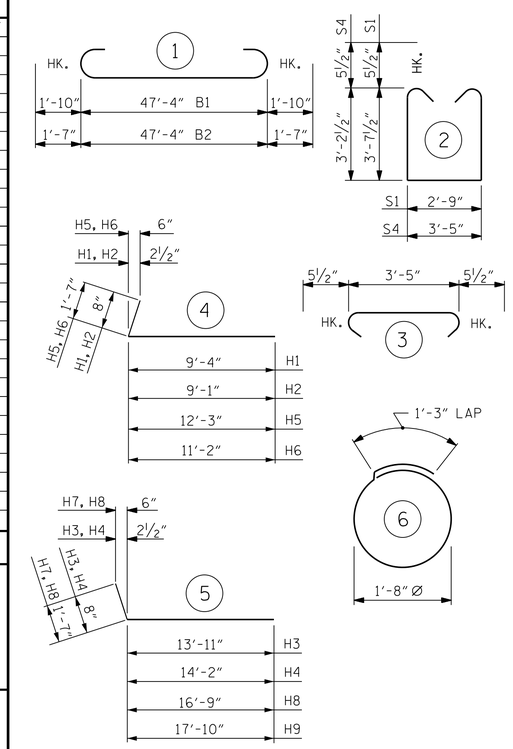

ALL BAR DIMENSIONS ARE OUT TO OUT.

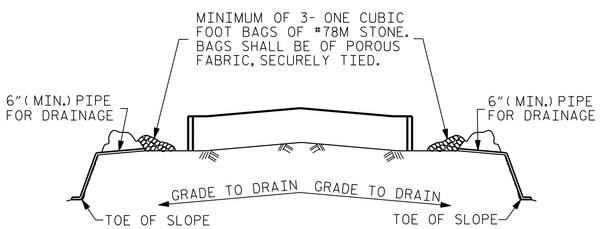

BAGGED STONE AND PIPE SHALL BE PLACED IMMEDIATELY AFTER COMPLETION OF END BENT EXCAVATION. PIPE MAY BE EITHER CONCRETE, CORRUGATED STEEL, CORRUGATED ALUMINUM ALLOY, OR CORRUGATED PLASTIC. PERFORATED PIPE WILL NOT BE ALLOWED.

BAGGED STONE SHALL REMAIN IN PLACE UNTIL THE ENGINEER DIRECTS THAT IT BE REMOVED. THE CONTRACTOR SHALL REMOVE AND DISPOSE OF SILT ACCUMULATIONS AT BAGGED STONE WHEN SO DIRECTED BY THE ENGINEER. BAGS SHALL BE REMOVED AND REPLACED WHENEVER THE ENGINEER DETERMINES THAT THEY HAVE DETERIORATED AND LOST THEIR EFFECTIVENESS.

NO SEPARATE PAYMENT WILL BE MADE FOR THIS WORK AND THE ENTIRE COST OF THIS WORK SHALL BE INCLUDED IN THE UNIT CONTRACT PRICE BID FOR THE SEVERAL PAY ITEMS.

TEMPORARY DRAINAGE AT END BENT

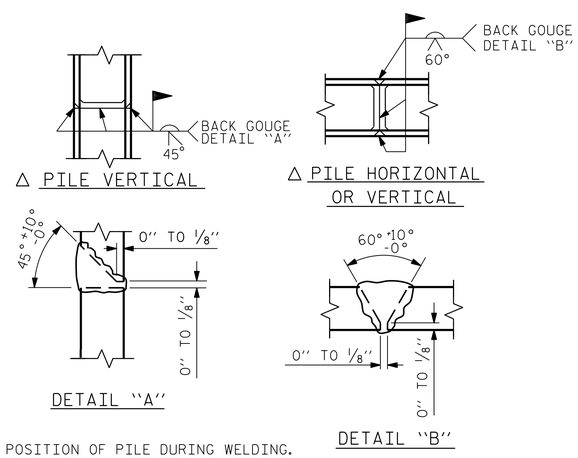

△ POSITION OF PILE DURING WELDING.

PILE SPLICE DETAILS

PROJECT NO. R-5752
ROBESON COUNTY
STATION: 30+39.23 -Y-

SHEET 4 OF 4

DOCUMENT NOT CONSIDERED FINAL UNLESS ALL SIGNATURES COMPLETED

CDM Smith
CDM SMITH
5400 Glenwood Avenue, Suite 400
Raleigh, NC 27612-3228
NC COA No. F-1255

DRAWN BY : A.L. STROUD DATE : 03/17
CHECKED BY : J.B. TAYLOR DATE : 03/17
DESIGN ENGINEER : J.B. TAYLOR DATE : 03/17

DWG. No.

NORTH CAROLINA PROFESSIONAL SEAL 33698 ENGINEER JOSHUA B. TAYLOR
3/30/2017
DocuSigned by: Joshua B. Taylor

STATE OF NORTH CAROLINA
DEPARTMENT OF TRANSPORTATION
RALEIGH

SUBSTRUCTURE

END BENTS 1 & 2 (INTEGRAL)

DETAILS

REVISIONS								SHEET NO.
NO.	BY:	DATE:	NO.	BY:	DATE:			S-20
1			3					TOTAL SHEETS
2			4					24

FILE: c:\cdmsm\tmp\h\d2313787\401_039_R5752_SMU_E4_020_770312.dgn
DATE: 9/8/2017 9:38:35 AM