DocuSign Envelope ID: CA1BB324-315D-46FD-A866-5671445DBA5B

# METAL POLE No. 3 AND 4

| PROJECT REFERENCE NO. | SHEET NO. |
|---|---|
| U-4751 | Sig. 4.5 |

## Design Loading for METAL POLE NO. 3

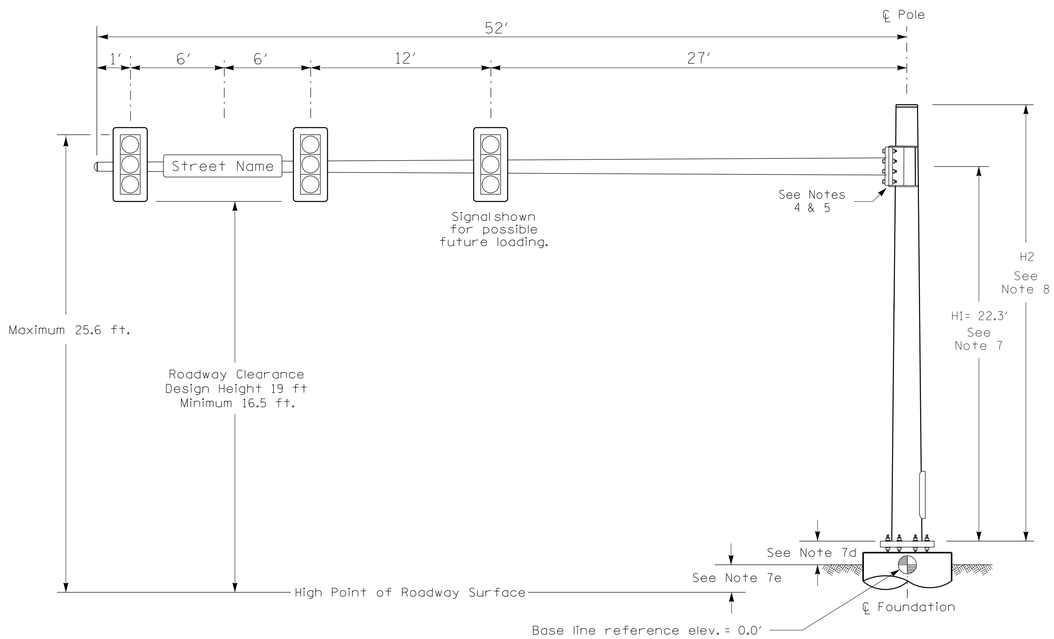


Elevation View

## Design Loading for METAL POLE NO. 4

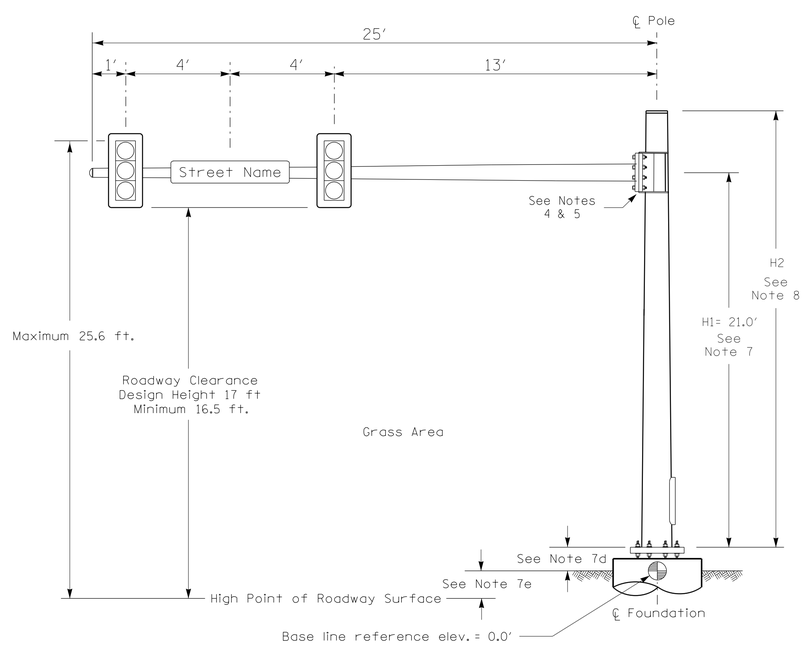


Elevation View

## SPECIAL NOTE

The contractor is responsible for verifying that the mast arm attachment height (H1) will provide the "Design Height" clearance from the roadway before submitting final shop drawings for approval. Verify elevation data below which was obtained by field measurement or from available project survey data.

## Elevation Data for Mast Arm Attachment (H1)

| Elevation Differences for: | Pole 3 | Pole 4 |
|---|---|---|
| Baseline reference point at ℄ Foundation @ ground level | 0.0 ft. | 0.0 ft. |
| Elevation difference at High point of roadway surface | +1.3 ft. | +2.0 ft. |
| Elevation difference at Edge of travelway or face of curb | +0.2 ft. | +1.0 ft. |

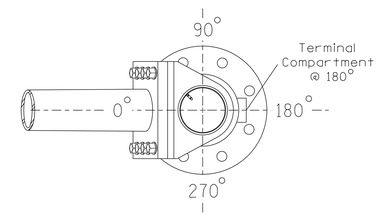


POLE RADIAL ORIENTATION

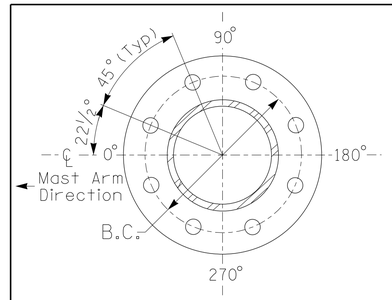


8 BOLT BASE PLATE DETAIL

See Note 6

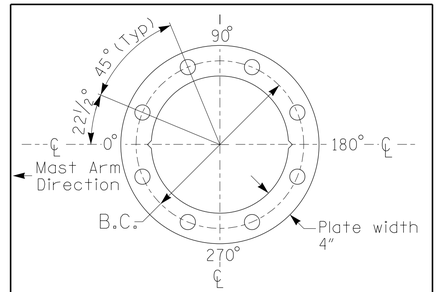


BASE PLATE TEMPLATE & ANCHOR BOLT LOCK PLATE DETAIL

For 8 Bolt Base Plate

## MAST ARM LOADING SCHEDULE

| LOADING SYMBOL | DESCRIPTION | AREA | SIZE | WEIGHT |
|---|---|---|---|---|
| | RIGID MOUNTED SIGNAL HEAD 12"-3 SECTION-WITH BACKPLATE | 9.3 S.F. | 25.5" W X 52.5" L | 60 LBS |
| Street Name | STREET NAME SIGN RIGID MOUNTED | 16.0 S.F. | 24.0" W X 96.0" L | 36 LBS |

## NOTES

DESIGN REFERENCE MATERIAL

1. Design the traffic signal structure and foundation in accordance with:
   - The 6th Edition 2013 AASHTO "Standard Specifications for Structural Supports for Highway Signs, Luminaires, and Traffic Signals, including all of the latest interim revisions.
   - The 2012 NCDOT "Standard Specifications for Roads and Structures." The latest addenda to the specifications can be found in the traffic signal project special provisions.
   - The 2012 NCDOT Roadway Standard Drawings.
   - The traffic signal project plans and special provisions.
   - The NCDOT "Metal Pole Standards" located at the following NCDOT website: https://connect.ncdot.gov/resources/safety/Pages/ITS-Design-Resources.aspx

DESIGN REQUIREMENTS

2. Design the traffic signal structure using the loading conditions shown in the elevation views. These are anticipated worst case "design loads" and may not represent the actual loads that will be applied at the time of the installation. The contractor should refer to the traffic signal plans for the actual loads that will be applied at the time of the installation.
3. Design all signal supports using stress ratios that do not exceed 0.9.
4. The camber design for the mast arm deflection should provide an appearance of a low pitched arch where the tip or the free end of the mast arm does not deflect below horizontal when fully loaded.
5. A clamp-type bolted mast arm-to-pole connection may be used instead of the welded ring stiffened box connection shown as long as the connection meets all of the design requirements.
6. Design base plate with 8 anchor bolt holes. Provide 2 inch x 60 inch anchor bolts.
7. The mast arm attachment height (H1) shown is based on the following design assumptions:
   a. Mast arm slope and deflection are not considered in determining the arm attachment height as they are assumed to offset each other.
   b. Signal heads are rigidly mounted and vertically centered on the mast arm.
   c. The roadway clearance height for design is as shown in the elevation views.
   d. The top of the pole base plate is 0.75 feet above the ground elevation.
   e. Refer to the Elevation Data Chart for the elevation differences between the proposed foundation ground level and the high point of the roadway.
8. The pole manufacturer will determine the total height (H2) of each pole using the greater of the following:
   - Mast arm attachment height (H1) plus 2 feet, or
   - H1 plus 1/2 of the total height of the mast arm attachment assembly plus 1 foot.
9. If pole location adjustments are required, the contractor must gain approval from the Engineer as this may affect the mast arm lengths and arm attachment heights. The contractor may contact the Signal Design Section Senior Structural Engineer for assistance at (919) 773-2800.
10. The contractor is responsible for verifying that the mast arm length shown will allow proper positioning of the signal heads over the roadway.
11. The contractor is responsible for providing soil penetration testing data (SPT) to the pole manufacturer so site specific foundations can be designed.

**DOCUMENT NOT CONSIDERED FINAL UNLESS ALL SIGNATURES COMPLETED**

NCDOT Wind Zone 2 (130 mph)

ATKINS
1616 EAST MILLBROOK ROAD, SUITE 160
RALEIGH, NORTH CAROLINA 27609
(919) 876-6888 NCBEES #F-0326

Prepared for the Offices of:
Transportation Mobility and Safety Division
Signal Design Section
750 N.Greenfield Pkwy,Garner,NC 27529

US 17 Business
(Market Street)
at
SR 1365 (Station Road)

Division 03 New Hanover County Wilmington

| | | | |
|---|---|---|---|
| PLAN DATE: | April 2017 | REVIEWED BY: | MB Toth |
| PREPARED BY: | LD Stouchko | REVIEWED BY: | |

| REVISIONS | INIT. | DATE |
|---|---|---|
| | | |

SCALE 0 N/A N/A

SEAL
NORTH CAROLINA PROFESSIONAL SEAL 025892 ENGINEER MELISSA B. TOTH

Docusigned by: Melissa B. Toth 6/6/2017
DOCUSIGNED SIGNATURE DATE

SIG. INVENTORY NO. 03-0791

06-JUN-2017 13:48
D:\Transportation\Traffic\Curr\100053597 - U-4751 Military Cutoff\02-Signals\Metal Poles\Single Mast Arm_MP (3-4) - 030791.dgn
emcb5386 AT LU529021