DocuSign Envelope ID: A8675FF2-C9DB-491E-84CE-DA994ADA9EA2

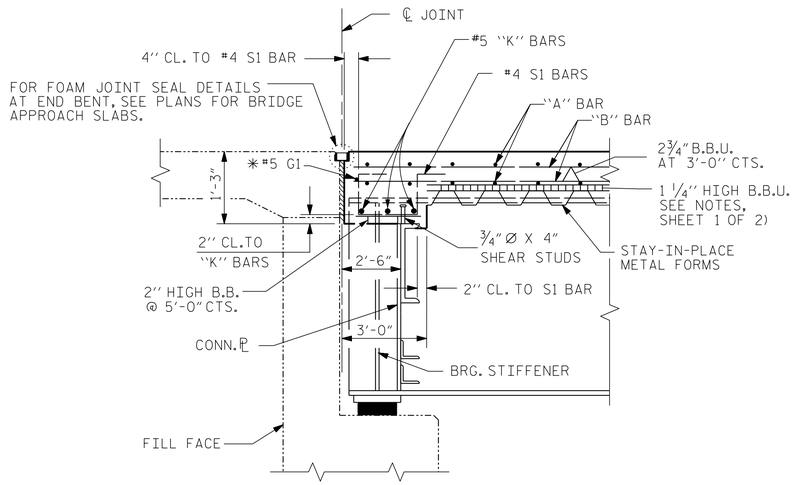

SECTION THRU END BENT

* #5G1 BAR MAY BE SHIFTED SLIGHTLY, AS NECESSARY, TO CLEAR DIAPHRAGM AND REINFORCING STEEL.

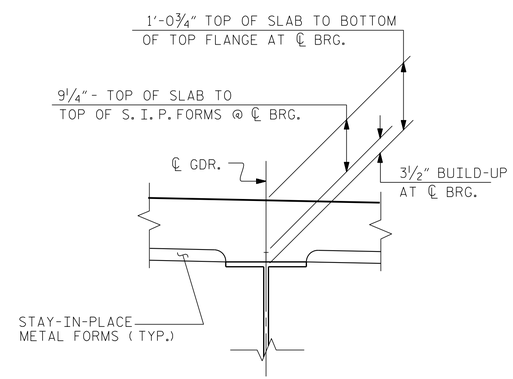

DETAIL ''A''

PROJECT NO. I-5786

JOHNSTON COUNTY

STATION: 17+77.11 -Y1-

SHEET 2 OF 2

ENGINEER OF RECORD:

DocuSigned by: Gregory M. Gilland

NORTH CAROLINA PROFESSIONAL SEAL 37400 ENGINEER GREGORY M. GILLAND

6/6/2017

WETHERILL ENGINEERING

1223 Jones Franklin Rd.
Raleigh, N.C. 27606
Bus: 919 851 8077
Fax: 919 851 8107
LICENSE NO. F-0377

STATE OF NORTH CAROLINA
DEPARTMENT OF TRANSPORTATION
RALEIGH

SUPERSTRUCTURE

TYPICAL SECTION

REVISIONS						SHEET NO.
NO.	BY:	DATE:	NO.	BY:	DATE:	S01-6
1			3			TOTAL SHEETS
2			4			32

DOCUMENT NOT CONSIDERED FINAL UNLESS ALL SIGNATURES COMPLETED

DRAWN BY : D. HODGE DATE : 4/17
CHECKED BY : B.C. HUNT DATE : 5/17

P:\2017\I-5786\Structures\DGN\IzzieMill_Y1\I-5786_Y1_TS_WEI.dgn
6/6/2017 6:21:35 AM