DocuSign Envelope ID: 2419AD85-1F11-4C5E-94E0-A6A53F0E0745

| PROJECT REFERENCE NO. | SHEET NO. |
|---|---|
| U-3621A | 2C-2 |

*NOTE: SEE STD. DWG. 846.01
FOR GENERAL NOTES

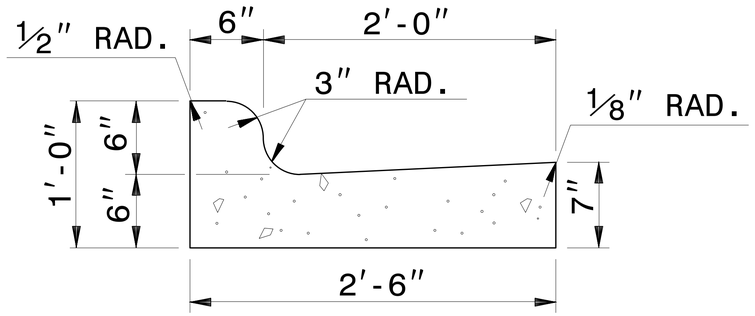


## 2'-6" CURB AND GUTTER

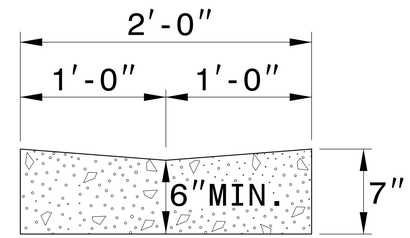


## VALLEY GUTTER

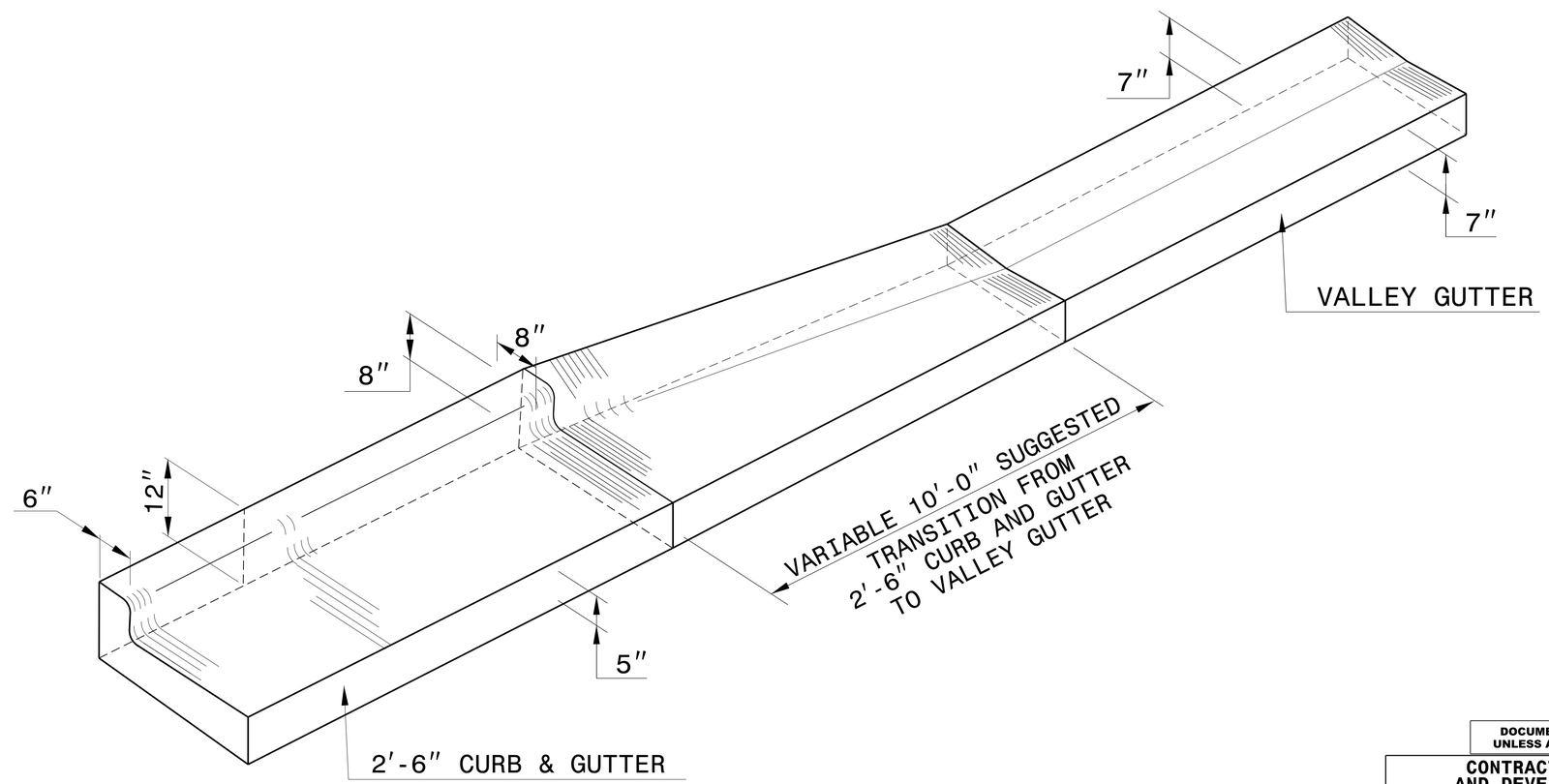


## ISOMETRIC VIEW OF TRANSITION

NORTH CAROLINA PROFESSIONAL ENGINEER SEAL 022966 Joel S. Howerton

4/10/2017

DocuSigned by: Joel S. Howerton, P.E.
873F3D17DCDC45F...

**DOCUMENT NOT CONSIDERED FINAL UNLESS ALL SIGNATURES COMPLETED**

**CONTRACT STANDARDS AND DEVELOPMENT UNIT**
Office 919-707-6950 FAX 919-250-4119

# TRANSITION FROM 2'-6" CURB AND GUTTER TO VALLEY GUTTER

ORIGINAL BY: T.S.SPELL DATE: FEB.4,2009
MODIFIED BY: DATE:
CHECKED BY: DATE:
FILE SPEC.: w:usr/details/stand/cgtransit.dgn

$$$$SYSTIME$$$$D
$$$$USERNAME$$$$DGN$$$$