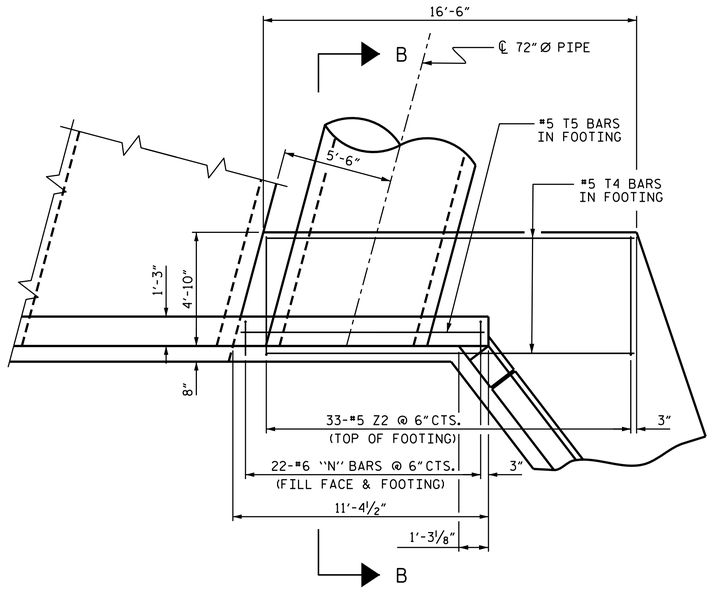

PLAN - 72" Ø PIPE HEADWALL

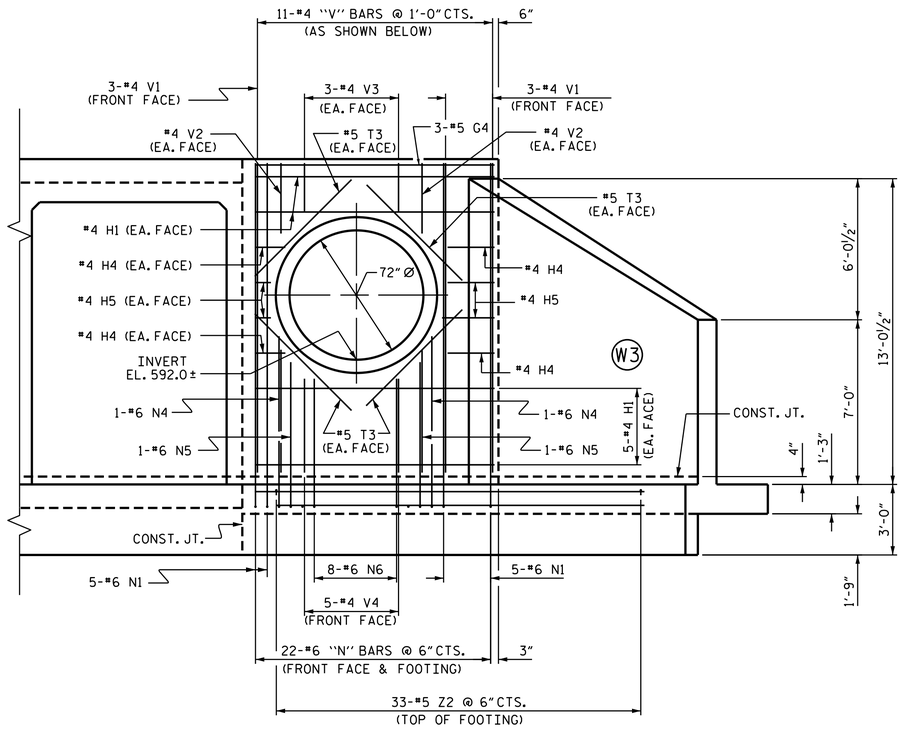

ELEVATION - 72" Ø PIPE HEADWALL

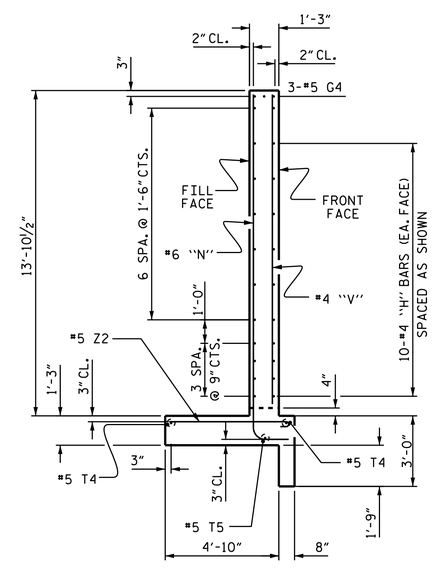

SECTION B-B

BAR TYPES

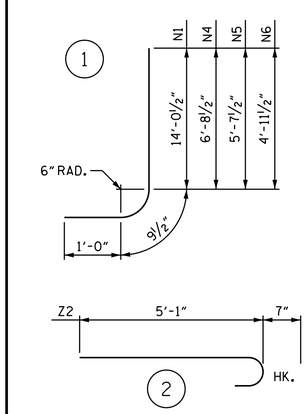

BAR DIMENSIONS ARE OUT TO OUT.

BILL OF MATERIAL

BAR	NO.	SIZE	TYPE	LENGTH	WEIGHT
H1	14	#4	STR	10'-8"	100
H4	8	#4	STR	2'-3"	12
H5	8	#4	STR	1'-9"	9
G4	3	#5	STR	10'-8"	33
N1	10	#6	1	15'-10"	238
N4	2	#6	1	8'-6"	26
N5	2	#6	1	7'-5"	22
N6	8	#6	1	6'-9"	81
T3	8	#5	STR	6'-2"	51
T4	2	#5	STR	16'-2"	34
T5	1	#5	STR	10'-8"	11
V1	6	#4	STR	13'-2"	53
V2	4	#4	STR	3'-0"	8
V3	6	#4	STR	2'-3"	9
V4	5	#4	STR	4'-0"	13
Z2	33	#5	2	5'-8"	195
REINFORCING STEEL (72" Ø PIPE HEADWALL)				LBS.	895
CLASS A CONCRETE (72" Ø PIPE HEADWALL)				C.Y.	6.0

RIGHT EXTENSION QUANTITIES

CLASS A CONCRETE

PHASE I BARRELS @	1.998	CY/FT	155.3	C.Y.
PHASE II BARREL @	1.651	CY/FT	128.4	C.Y.
72" Ø PIPE HEADWALL			6.0	C.Y.
WING W3, ETC.			15.7	C.Y.
WING W4, ETC.			19.4	C.Y.
TOTAL			324.8	C.Y.

REINFORCING STEEL

PHASE I BARRELS	21,016	LBS.
PHASE II BARREL	20,194	LBS.
72" Ø PIPE HEADWALL	895	LBS.
WING W3, ETC.	1,392	LBS.
WING W4, ETC.	1,622	LBS.
TOTAL	45,119	LBS.

FOUNDATION CONDITIONING MAT'L. 175 TONS

CULVERT EXCAVATION _____ LUMP SUM

PROJECT NO. U-3633

GASTON COUNTY

STATION: 54+22.00 -L-

SHEET 8 OF 13

STATE OF NORTH CAROLINA
DEPARTMENT OF TRANSPORTATION
RALEIGH

72" Ø PIPE HEADWALL

(RIGHT EXTENSION)

NORTH CAROLINA PROFESSIONAL SEAL 20125 ENGINEER MARSHALL G. CHEEK, JR.

DocuSigned by: Marshall G. Cheek, Jr
6549D6EBAA38405...
3/31/2017

DOCUMENT NOT CONSIDERED FINAL UNLESS ALL SIGNATURES COMPLETED

REVISIONS						SHEET NO.
NO.	BY:	DATE:	NO.	BY:	DATE:	C-8
1			3			TOTAL SHEETS
2			4			13

DRAWN BY : H.A. LOCKLEAR DATE : 3/31/16
CHECKED BY : K.D. LAYNE DATE : 8/4/16
DESIGN ENGINEER OF RECORD: H.A. LOCKLEAR DATE : 11/16

29-MAR-2017 11:58
L:\Structures\Final Plans\U3633_SD_CU_01.dgn
kpaschal