DocuSign Envelope ID: 3E5D6694-A0FD-4789-B938-C4E22AB8E89A

3/22/2017 8:32:05 AM G:\Projects\2014\U-3109A\Structures\Site 2\Site 2-Str 3 Bridge 435 (NBL)\Drawings\Final\403_U3109A_smu_eb2.dgn

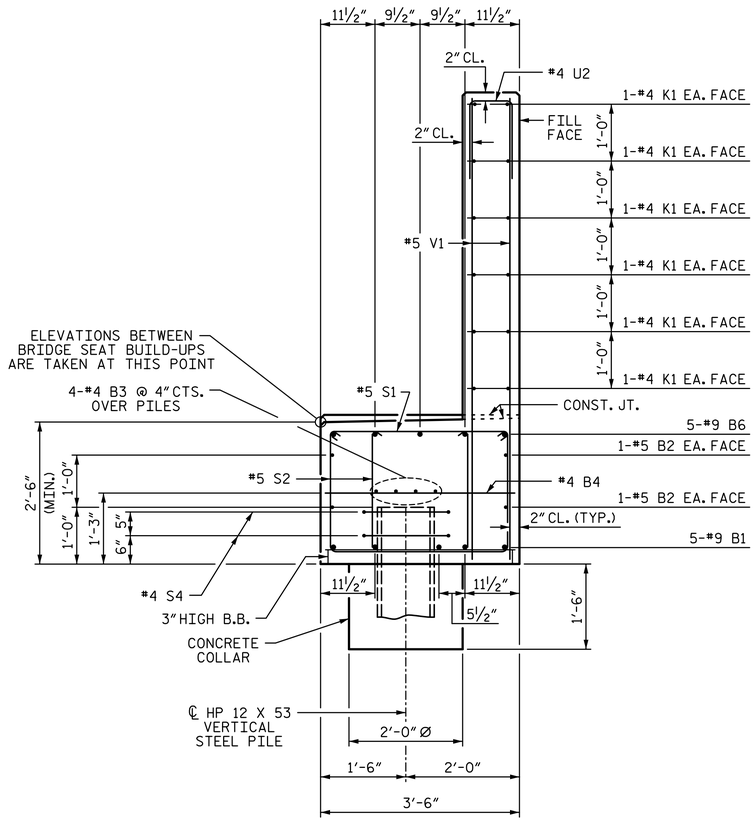

SECTION A-A

(TIEBACK NOT SHOWN FOR CLARITY)

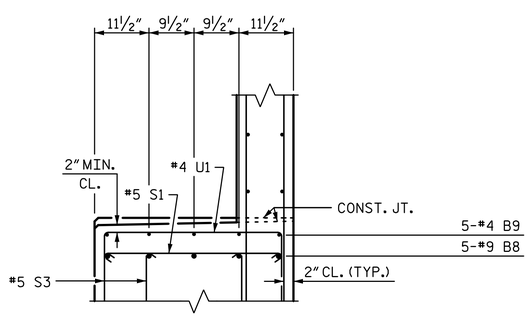

SECTION B-B

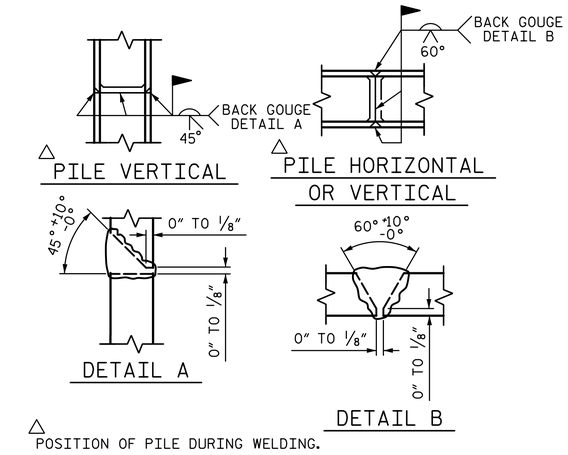

△ POSITION OF PILE DURING WELDING.

PILE SPLICE DETAILS

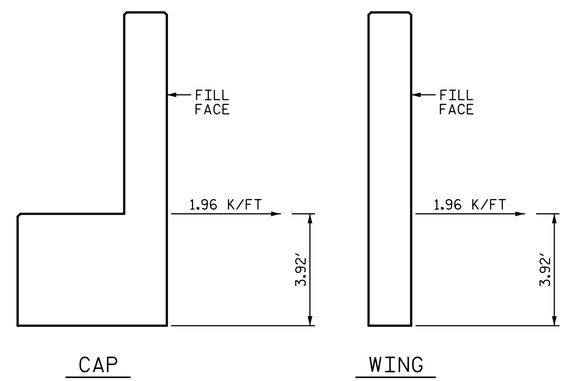

TIEBACK DETAILS

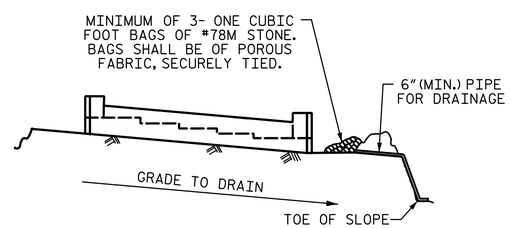

BAGGED STONE AND PIPE SHALL BE PLACED IMMEDIATELY AFTER COMPLETION OF END BENT EXCAVATION. PIPE MAY BE EITHER CONCRETE, CORRUGATED STEEL, CORRUGATED ALUMINUM ALLOY, OR CORRUGATED PLASTIC. PERFORATED PIPE WILL NOT BE ALLOWED.

BAGGED STONE SHALL REMAIN IN PLACE UNTIL THE ENGINEER DIRECTS THAT IT BE REMOVED. THE CONTRACTOR SHALL REMOVE AND DISPOSE OF SILT ACCUMULATIONS AT BAGGED STONE WHEN SO DIRECTED BY THE ENGINEER. BAGS SHALL BE REMOVED AND REPLACED WHENEVER THE ENGINEER DETERMINES THAT THEY HAVE DETERIORATED AND LOST THEIR EFFECTIVENESS.

NO SEPARATE PAYMENT WILL BE MADE FOR THIS WORK AND THE ENTIRE COST OF THIS WORK SHALL BE INCLUDED IN THE UNIT CONTRACT PRICE BID FOR THE SEVERAL PAY ITEMS.

TEMPORARY DRAINAGE AT END BENT

BAR TYPES

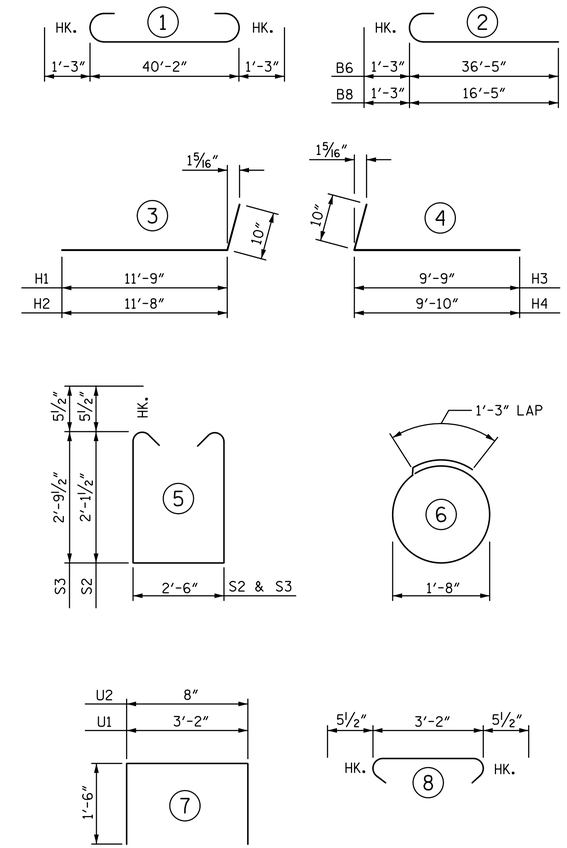

ALL BAR DIMENSIONS ARE OUT TO OUT

BILL OF MATERIAL

END BENT 2

BAR	NO.	SIZE	TYPE	LENGTH	WEIGHT
B1	5	9	1	42'-8"	725
B2	4	5	STR	40'-4"	168
B3	8	4	STR	21'-5"	114
B4	13	4	STR	3'-2"	27
B5	2	5	STR	6'-11"	14
B6	5	9	2	37'-8"	640
B7	5	4	STR	8'-10"	30
B8	5	9	2	17'-8"	300
B9	5	4	STR	7'-3"	24
H1	22	5	3	12'-7"	289
H2	22	5	3	12'-6"	287
H3	20	5	4	10'-7"	221
H4	20	5	4	10'-8"	223
K1	24	4	STR	21'-5"	343
K2	8	4	STR	2'-7"	14
S1	62	5	8	4'-1"	264
S2	74	5	5	7'-8"	592
S3	50	5	5	9'-0"	469
S4	12	4	6	6'-6"	52
U1	12	4	7	6'-2"	49
U2	35	4	7	3'-8"	86
V1	70	5	STR	8'-0"	584
V2	34	5	STR	10'-10"	384
V3	30	5	STR	9'-9"	305

TOTAL REINFORCING STEEL 6204 LB

CLASS "A" CONCRETE BREAKDOWN
POUR 1
(CAP, COLLARS, & LOWER WINGS) 19.1 CY

POUR 2
(BACKWALL AND UPPER WINGS) 15.2 CY

TOTAL CLASS "A" CONCRETE 34.3 CY

HP 12 X 53 STEEL PILES
NO. 6 570 LF
PILE DRIVING EQUIPMENT SETUP
FOR HP 12 X 53 STEEL PILES 6 EA

PROJECT NO. U-3109A
ALAMANCE COUNTY
STATION: 146+61.35 -L-

SHEET 3 OF 3

STATE OF NORTH CAROLINA
DEPARTMENT OF TRANSPORTATION
RALEIGH
SUBSTRUCTURE

END BENT 2

(NBL)

REVISIONS						SHEET NO.
NO.	BY:	DATE:	NO.	BY:	DATE:	S03-47
1			3			TOTAL SHEETS
2			4			S03-53

STR. #3

DRAWN BY: S.D. COOPER DATE: 9-15
CHECKED BY: J.A. BATTS DATE: 9-15
DESIGN ENGINEER OF RECORD: J.A. BATTS DATE: 9-15

PLANS PREPARED BY:
SIMPSON ENGINEERS & ASSOCIATES
5640 Dillard Drive
Suite 200
Cary, NC 27518
(919) 852-0468
(919) 852-0598 (Fax)
www.simpsonengr.com
LICENSURE NO. C-2521

NORTH CAROLINA PROFESSIONAL SEAL 18065 ENGINEER JOHN A. BATTS
3/22/2017