DocuSign Envelope ID: 335FBBA3-7647-46B4-90F1-0251969B9460

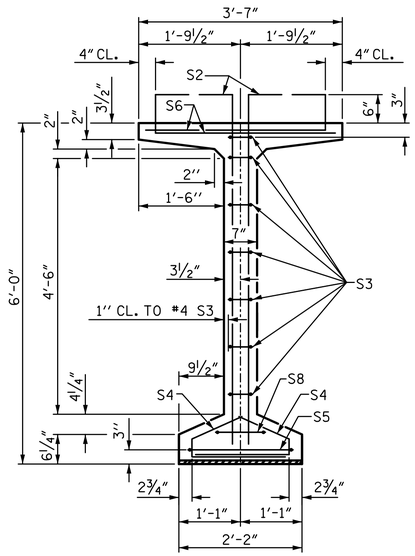

SECTION A-A

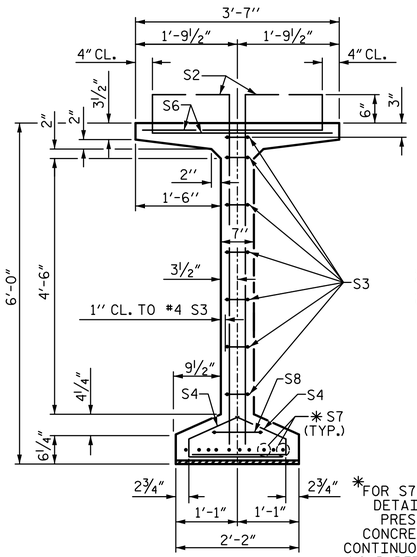

SECTION B-B

✱FOR S7 BARS, SEE DETAIL "C" OF PRESTRESSED CONCRETE GIRDER CONTINUOUS FOR LIVE LOAD DETAILS SHEET

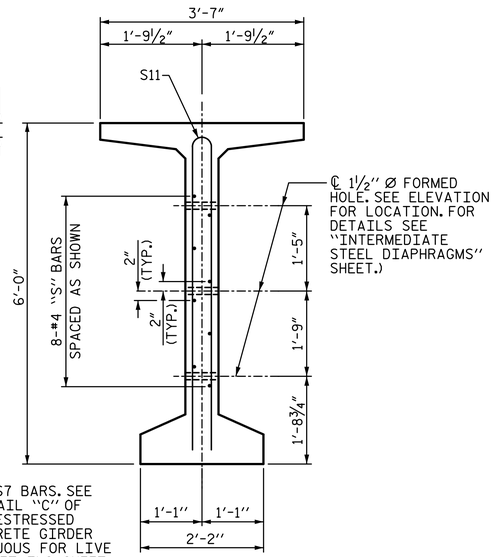

SECTION C-C

(S1, S6 AND S9 BARS NOT SHOWN)

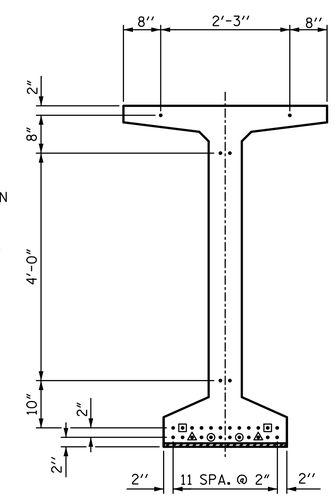

@ END OF GIRDER

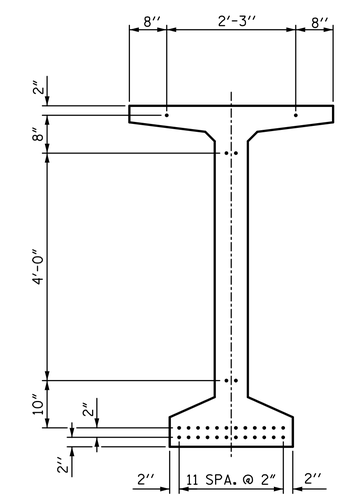

@ ℄ OF GIRDER

0.6" LOW RELAXATION STRAND LAYOUT

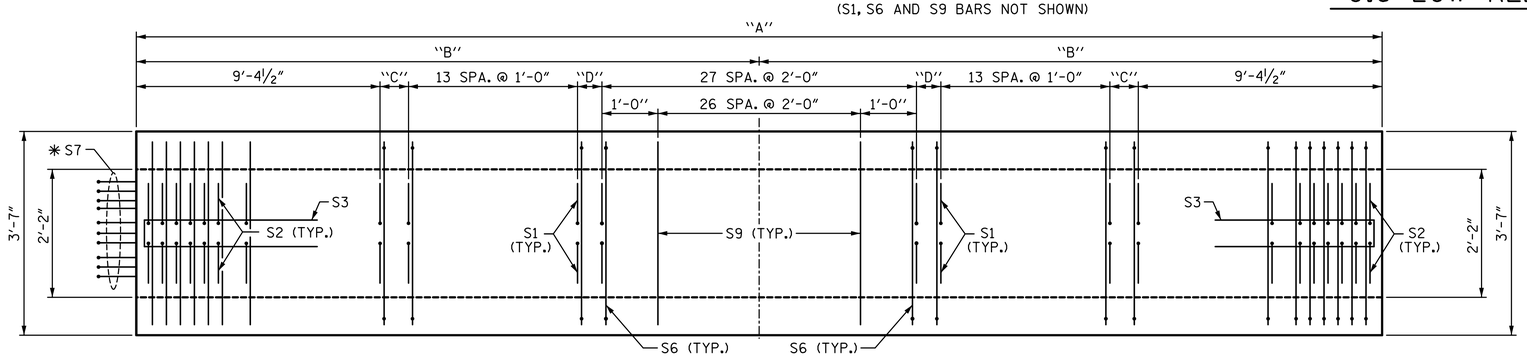

PLAN OF GIRDER

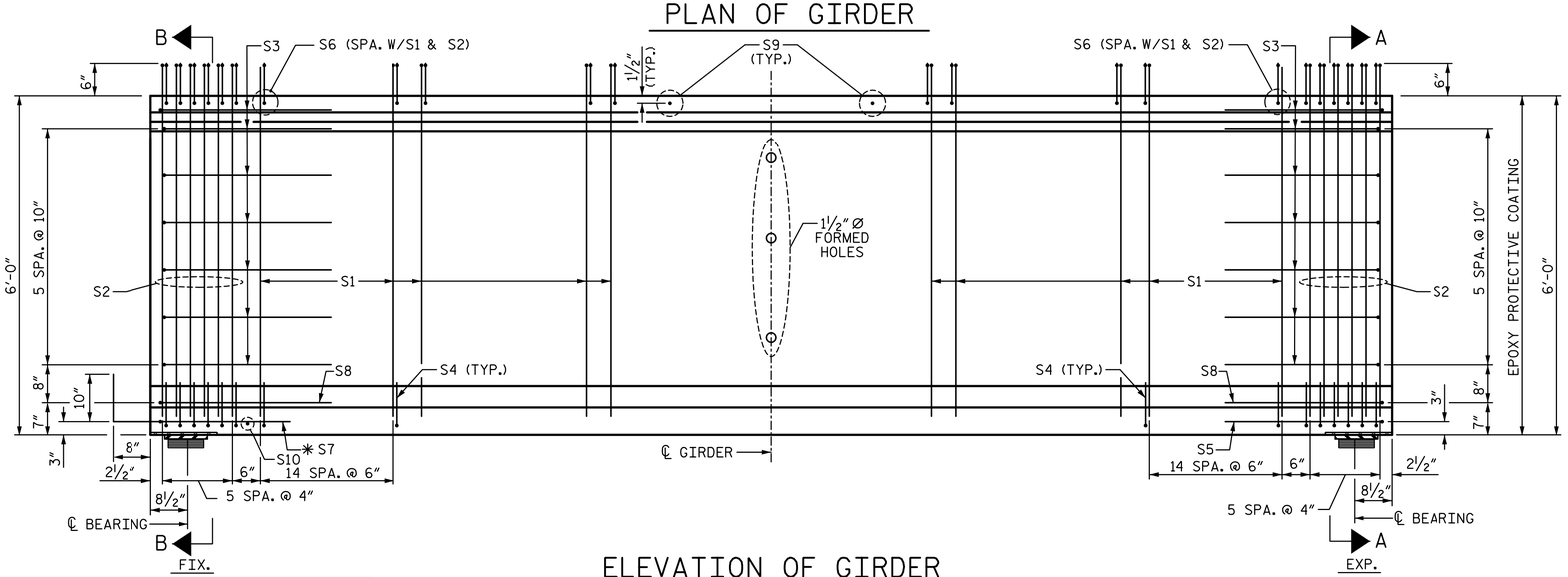

ELEVATION OF GIRDER

SEE GIRDER DIMENSION TABLE ON "PRESTRESSED CONCRETE GIRDER CONTINUOUS FOR LIVE LOAD DETAILS" SHEET FOR DIMENSIONS "A", "B", "C" AND "D"

- FULLY DEBONDED STRAND
- STRAND DEBONDED FOR 8'-0" FROM END OF GIRDER
- STRAND DEBONDED FOR 16'-0" FROM END OF GIRDER
- STRAND DEBONDED FOR 24'-0" FROM END OF GIRDER

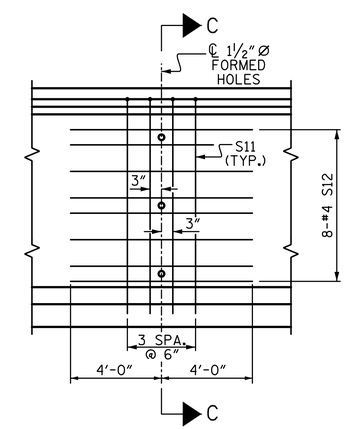

PARTIAL ELEVATION

(SHOWING INTERMEDIATE STEEL DIAPHRAGM REINFORCING STEEL FOR ALL GIRDERS)

0.6" Ø L. R. GRADE 270 STRANDS

AREA (SQUARE INCHES)	ULTIMATE STRENGTH (LBS. PER STRAND)	APPLIED PRESTRESS (LBS. PER STRAND)
0.217	58,600	43,950

REINFORCING STEEL FOR ONE GIRDER

BAR	NO.	SIZE	TYPE	LENGTH	WEIGHT
S1	172	4	1	6'-10"	785
S2	24	5	1	6'-10"	171
S3	14	4	2	8'-5"	79
S4	84	4	3	3'-0"	168
S5	1	5	2	9'-10"	10
S6	196	5	4	4'-4"	886
✱ S7	10	5	STR	3'-8"	38
S8	2	5	2	9'-0"	19
S9	27	5	STR	3'-3"	92
S10	1	3	STR	1'-10"	1
S11	4	5	5	11'-6"	48
S12	8	4	STR	8'-0"	43

✱NOTE: S7 BARS SHALL BE BENT BEFORE SHIPMENT. HEAT BENDING SHALL NOT BE ALLOWED.

BAR TYPES

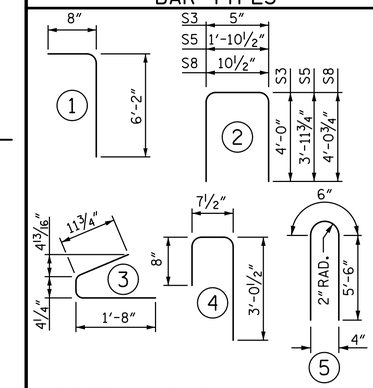

ALL BAR DIMENSIONS ARE OUT-TO-OUT

QUANTITIES FOR ONE GIRDER

SPAN D	REINFORCING STEEL LB.	6,000 PSI CONCRETE C.Y.	0.6" Ø L. R. STRANDS No.
ALL GIRDERS	2340	21.7	30

GIRDERS REQUIRED

NUMBER	LENGTH	TOTAL LENGTH
4	"A"	404.52

PROJECT NO. U-3109A

ALAMANCE COUNTY

STATION: 146+61.35 -L-

STATE OF NORTH CAROLINA
DEPARTMENT OF TRANSPORTATION
RALEIGH

SUPERSTRUCTURE
72" PRESTRESSED CONCRETE MODIFIED BULB TEE CONTINUOUS FOR LIVE LOAD
SPAN D
(NBL)

PLANS PREPARED BY:

SIMPSON ENGINEERS & ASSOCIATES
5640 Dillard Drive
Suite 200
Cary, NC 27518
(919) 852-0468
(919) 852-0598 (Fax)
www.simpsonengr.com
LICENSURE NO. C-2521

NORTH CAROLINA PROFESSIONAL SEAL 19056 ENGINEER JOHN A. BATTS
1/6/2017

REVISIONS								SHEET NO.
NO.	BY:	DATE:	NO.	BY:	DATE:			S03-22
1			3					TOTAL SHEETS
2			4					S03-53

STR. #3

DRAWN BY: T. BANKOVICH DATE: 9-15
CHECKED BY: J.A. BATTS DATE: 9-15
DESIGN ENGINEER OF RECORD: J.A. BATTS DATE: 9-15

1/6/2017 8:11:09 AM G:\Projects\2014\U-3109A\Structures\Site 2\Site 2-Str 3 Bridge 435 (NBL)\Drawings\Final\403_U3109A_smu_pcg.dgn