PROJECT REFERENCE NO.	SHEET NO.
I-5000	UC-3A

DESIGNED BY: BCH
DRAWN BY: BCH
CHECKED BY: JLT
APPROVED BY: JES
REVISED:

NORTH CAROLINA DEPARTMENT OF TRANSPORTATION

UTILITIES ENGINEERING SEC.
PHONE:(919)707-6690
FAX:(919)250-4151

NORTH CAROLINA PROFESSIONAL ENGINEER SEAL — DocuSigned by: Bobby C Housier — BOBBY C HOUSIER — 11/7/2016

UTILITY CONSTRUCTION PLANS ONLY

UTILITY CONSTRUCTION

DOCUMENT NOT CONSIDERED FINAL UNLESS ALL SIGNATURES COMPLETED

PROJECT TYPICAL DETAILS

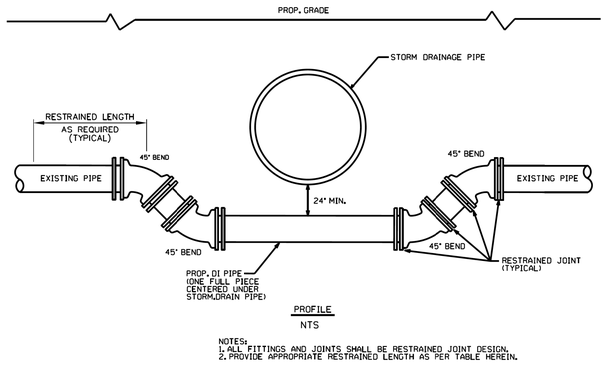

NOTES:
1. ALL FITTINGS AND JOINTS SHALL BE RESTRAINED JOINT DESIGN.
2. PROVIDE APPROPRIATE RESTRAINED LENGTH AS PER TABLE HEREIN.

FORCE MAIN / WATER MAIN CROSSING UNDER STORM DRAINAGE PIPE

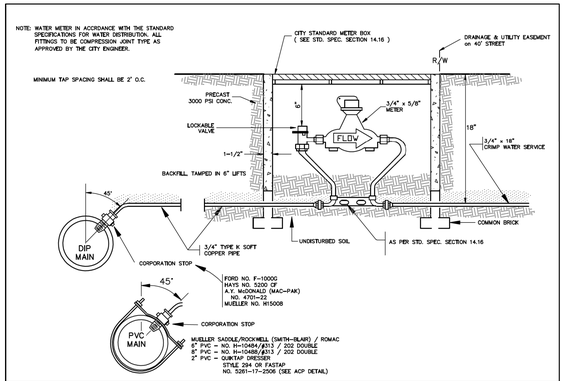

REVISED	F.B.	PG.		
02-02-01 09-23-01 03-10-03 03-03-09			DATE: AUG. 14, 1984 SCALE: NTS DRAWN BY: MLB, EZ, JW CHECKED BY: DCC, FAP CITY ENGINEER: FAP	**Standard Detail** **3/4" x 5/8"Water Tap and Meter Details**

OFFICE OF THE CITY ENGINEER GASTONIA, N.C.
FILE NO. **71B-20**

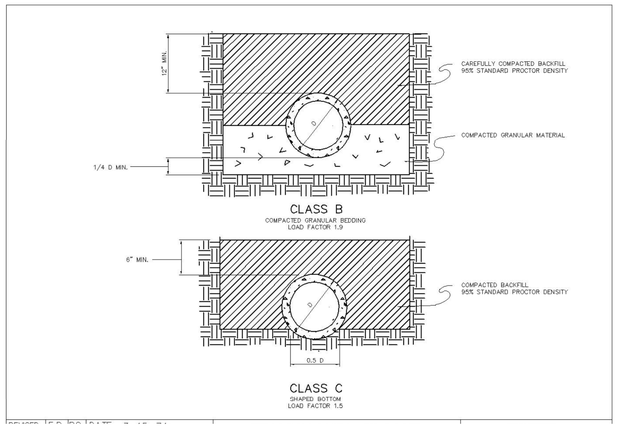

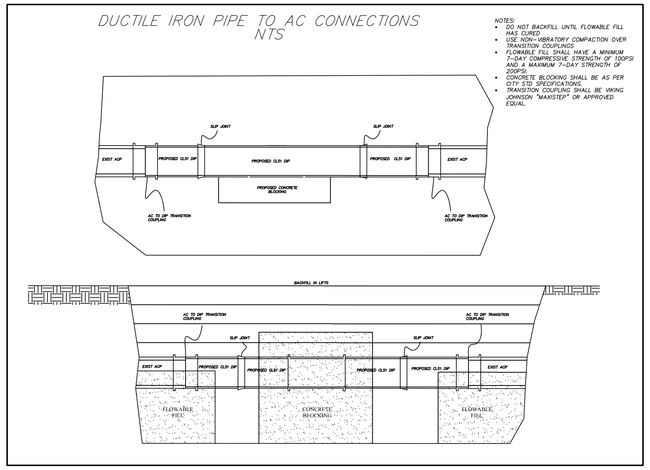

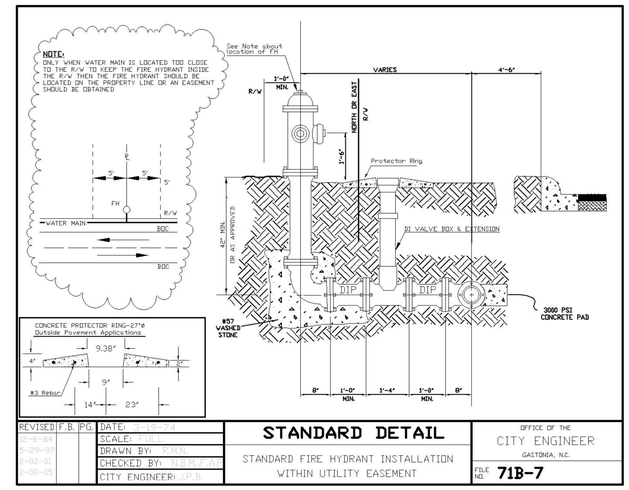

REVISED	F.B.	PG.		
12-6-94 4-29-97 2-02-01 1-08-05			DATE: FEB. 24 SCALE: NONE DRAWN BY: RMN CHECKED BY: NBM,FAP CITY ENGINEER: JPB	**STANDARD DETAIL** STANDARD FIRE HYDRANT INSTALLATION WITHIN UTILITY EASEMENT

OFFICE OF THE CITY ENGINEER GASTONIA, N.C.
FILE NO. **71B-7**

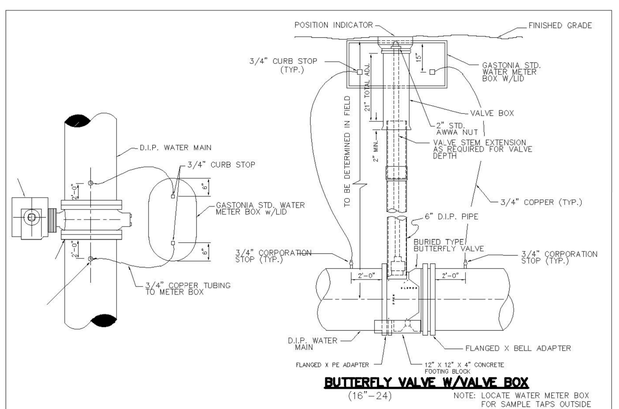

BUTTERFLY VALVE W/VALVE BOX
(16"–24")

NOTE: LOCATE WATER METER BOX FOR SAMPLE TAPS OUTSIDE OF PAVEMENT AREAS

REVISED	F.B.	PG.		
2-3-89			DATE: OCTOBER 25, 1988 SCALE: NONE DRAWN BY: DBD CHECKED BY: PNR, FAP CITY ENGINEER: DEC	**STANDARD DETAIL** **BUTTERFLY VALVE W/ VALVE BOX (16"–24")**

OFFICE OF THE CITY ENGINEER GASTONIA, N.C.
FILE NO. **71B-24**

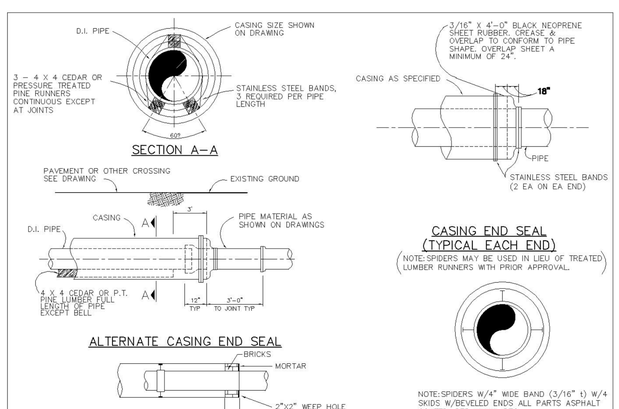

REVISED	F.B.	PG.		
			DATE: NOV. 3, 1988 SCALE: NONE DRAWN BY: DBD CHECKED BY: PNR,FAP CITY ENGINEER: DEC	**STANDARD DETAIL** **DRY BORE AND JACK ENCASEMENT AND CARRIER DETAIL**

OFFICE OF THE CITY ENGINEER GASTONIA, N.C.
FILE NO. **71B-25**

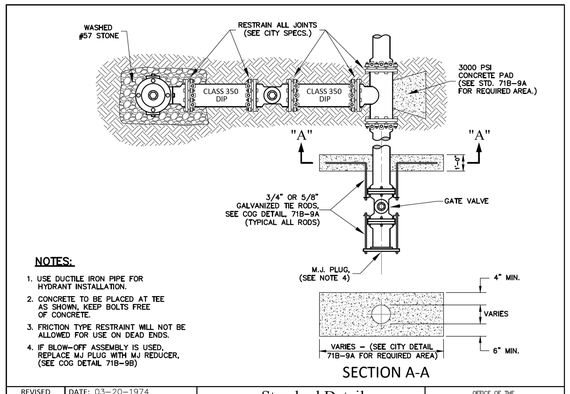

NOTES:
1. USE DUCTILE IRON PIPE FOR HYDRANT INSTALLATION.
2. CONCRETE TO BE PLACED AT TEE AS SHOWN, KEEP BOLTS FREE OF CONCRETE.
3. FRICTION TYPE RESTRAINT WILL NOT BE ALLOWED FOR USE ON DEAD ENDS.
4. IF BLOW-OFF ASSEMBLY IS USED, REPLACE MJ PLUG WITH MJ REDUCER, (SEE COG DETAIL 71B-9B)

REVISED	F.B.	PG.		
04/23/15			DATE: 03-20-1974 SCALE: NONE DRAWN BY: RMN, EZ CHECKED BY: NBM, FAP CITY ENGINEER: JPB	**Standard Detail** Fire Hydrant Leg & Dead End Detail

OFFICE OF THE CITY ENGINEER GASTONIA, N.C.
FILE NO. **71B-9**

5/14/99
11/7/2016 3:41 PM
U:\Utilities\Rdy_to_Let\I5000_Ut_notes_UC03 & details_UC03a-03c)_psh.dgn