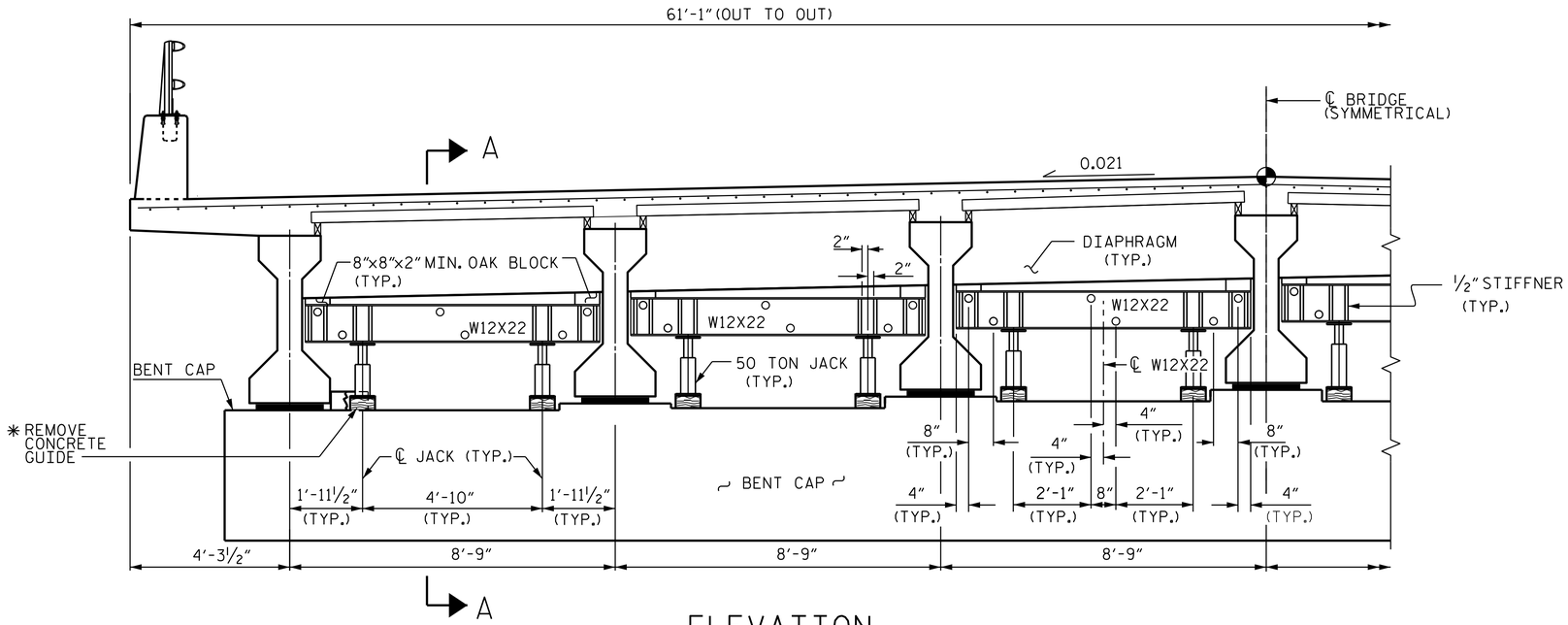

ELEVATION

(BENT 24, 25 OR 26)

* REPLACE AFTER COMPLETION OF JACKING OPERATION

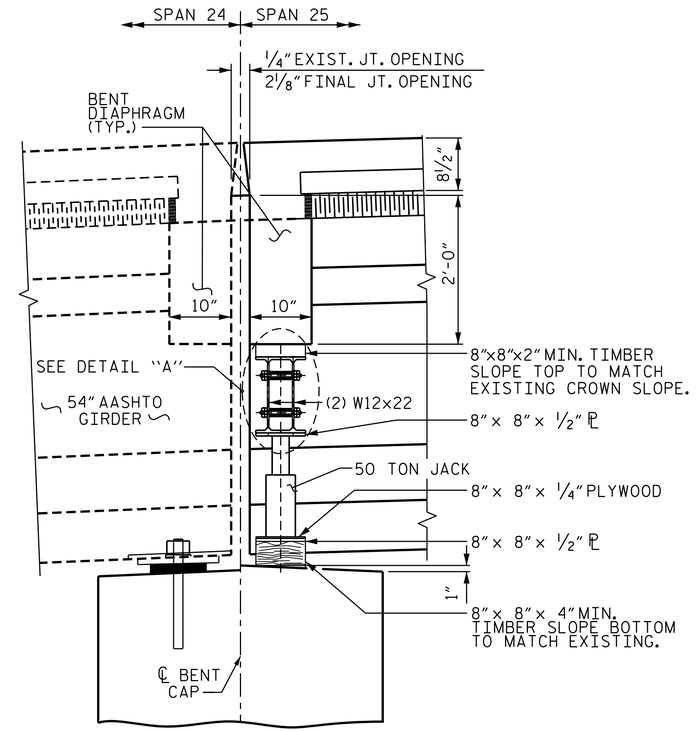

SECTION A-A

(BENT 24)

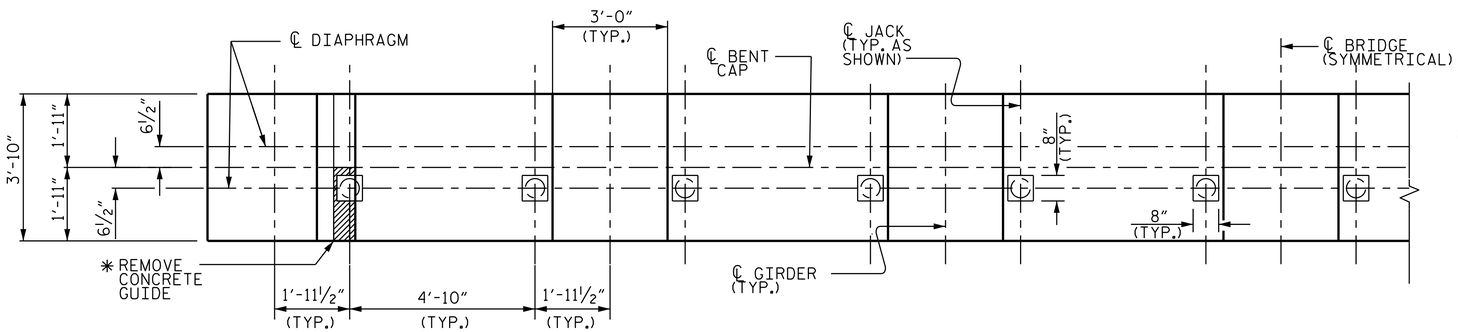

PLAN VIEW BENT 24

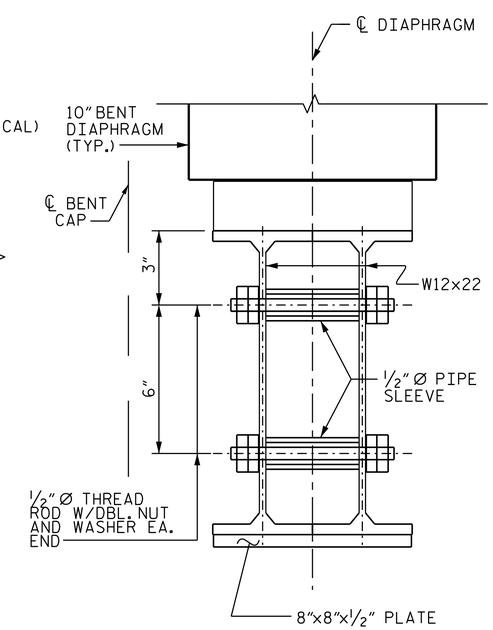

DETAIL "A"

NORTH CAROLINA PROFESSIONAL SEAL 21271 ENGINEER GREGORY W. DICKEY

DocuSigned by: Greg Dickey 2/22/2017

DOCUMENT NOT CONSIDERED FINAL UNLESS ALL SIGNATURES COMPLETED

PROJECT NO. B-5938
COUNTY: CARTERET
BRIDGE NO. 68
SHEET 2 OF 6

STATE OF NORTH CAROLINA
DEPARTMENT OF TRANSPORTATION
RALEIGH

SPAN RE-POSITIONING VERTICAL JACKING

REVISIONS						SHEET NO.
NO.	BY	DATE	NO.	BY	DATE	S1-10
1			3			TOTAL SHEETS
2			4			-

DRAWN BY: WJ HARRIS DATE : JAN. 2017
CHECKED BY: GW DICKEY DATE : JAN. 2017

22-FEB-2017 07:04 gdickey $$$$$$$$$$$$$$$$$DGN$$$$$$$$$$$$$$$$$