NOTES

SEE TRANSPORTATION MANAGEMENT PLANS FOR LANE WIDTHS, SEQUENCING AND OTHER TRAFFIC CONTROL MEASURES FOR STAGING OF OVERLAY SURFACE PREPARATION AND LMS-VES PLACEMENT.

WHEN PREPARING THE SURFACE FOR AN LMC-VES OVERLAY ADJACENT TO A PREVIOUSLY PLACED LMC-VES STAGE, THE PREVIOUSLY PLACED LMC-VES SHALL BE REMOVED FOR A DISTANCE OF 4 INCHES FROM THE EDGE OF THE LMC-VES. THE SURFACE OF THE NEW STAGE AREA, ALONG WITH THE 4 INCH OVERLAY AREA, SHALL BE PREPARED AS PER THE OVERLAY SURFACE PREPARATION SPECIAL PROVISION. NEW LMC-VES SHALL BE PLACED IN THE 4 INCH OVERLAP AS PART OF THE NEW LMC-VES STAGE PLACEMENT.

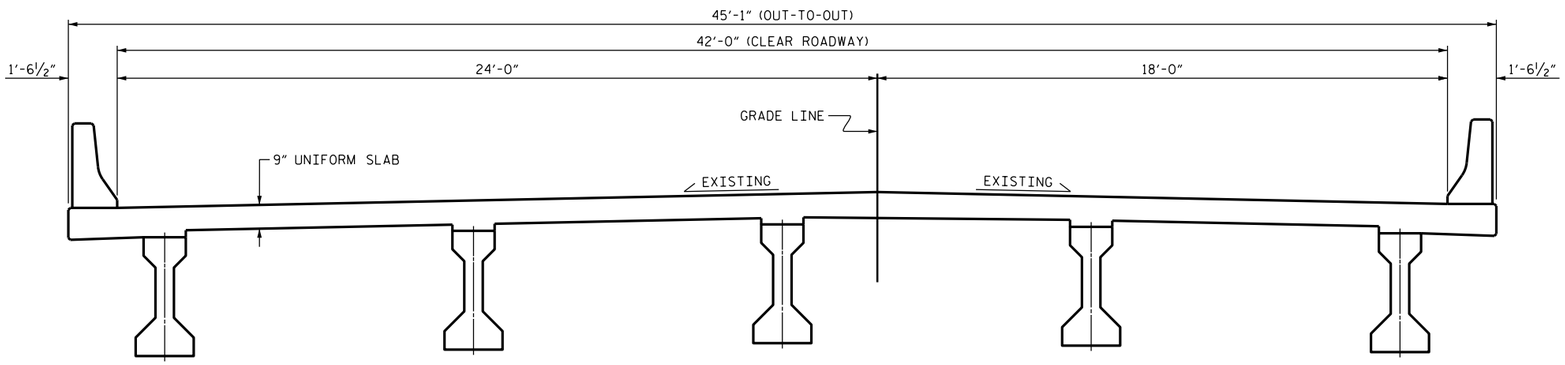

TYPICAL SECTION
(EXISTING)

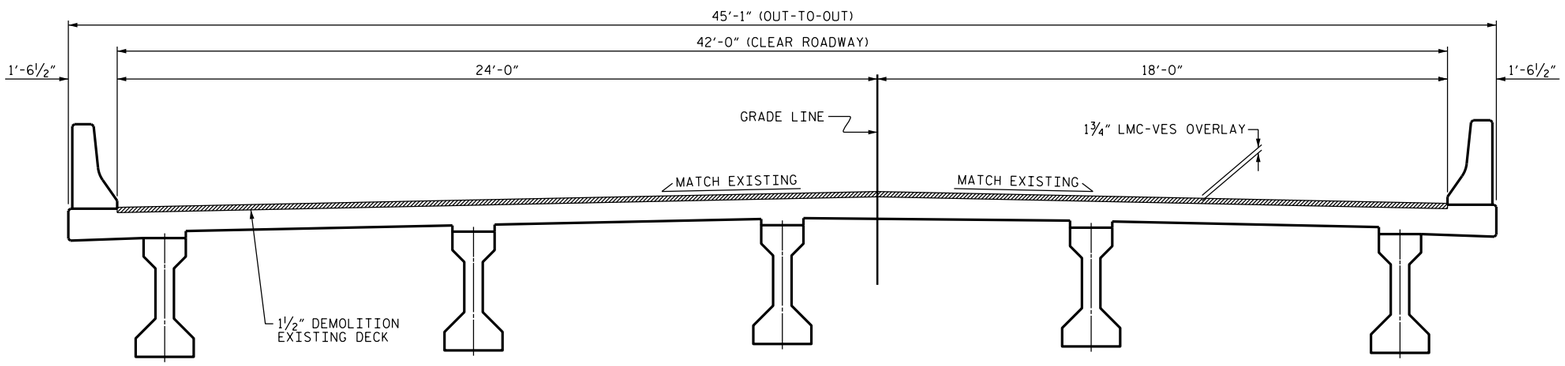

TYPICAL SECTION
(PROPOSED)

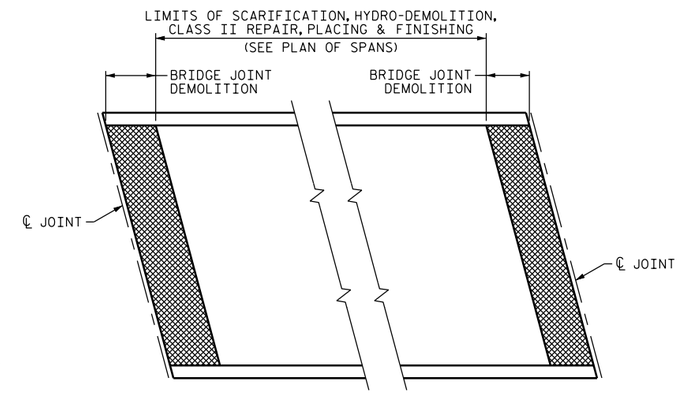

PLAN

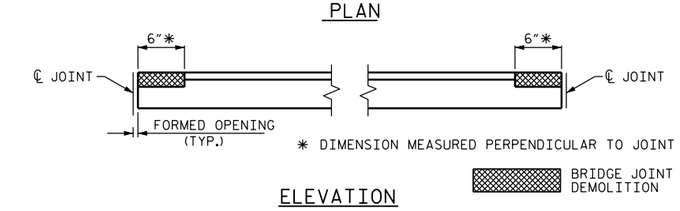

ELEVATION

PAY LIMITS FOR OVERLAY BID ITEMS

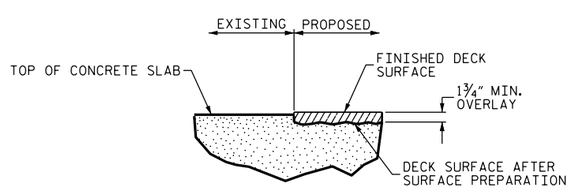

DETAIL FOR LMC-VES OVERLAY

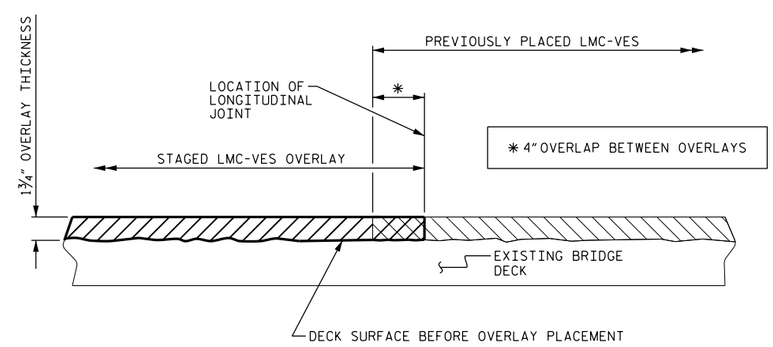

STAGED LMC-VES OVERLAY JOINT
(AS NEEDED)

PROJECT NO. I-5809
McDOWELL COUNTY
BRIDGE NO. 155

DocuSigned by:
John A. Yannaccone
7BC3...

NORTH CAROLINA PROFESSIONAL SEAL 32492 ENGINEER JOHN A. YANNACCONE

9/27/2016

STATE OF NORTH CAROLINA
DEPARTMENT OF TRANSPORTATION
RALEIGH

TYPICAL SECTION AND SURFACE PREPARATION DETAILS

REVISIONS							
NO.	BY:	DATE:	NO.	BY:	DATE:	SHEET NO.	
1			3			S-59	
2			4			TOTAL SHEETS	
						68	

DOCUMENT NOT CONSIDERED FINAL UNLESS ALL SIGNATURES COMPLETED

DRAWN BY : J. YANNACCONE DATE : 07/16
CHECKED BY : S. WANCE DATE : 07/16

27-SEP-2016 14:36
R:\Structures\Final Drawings\McDowell155\I5809_SMU_TS_155.dgn