DocuSign Envelope ID: C651D33D-A0D3-4D38-AFF0-ED710E8ED3FD

PROJ. REFERENCE NO.	SHEET NO.
R-4753	TMP-25

HDR Engineering, Inc. of the Carolinas
555 Fayetteville St, Suite 900 Raleigh, N.C. 27601
N.C.B.E.L.S. License Number: F-0116

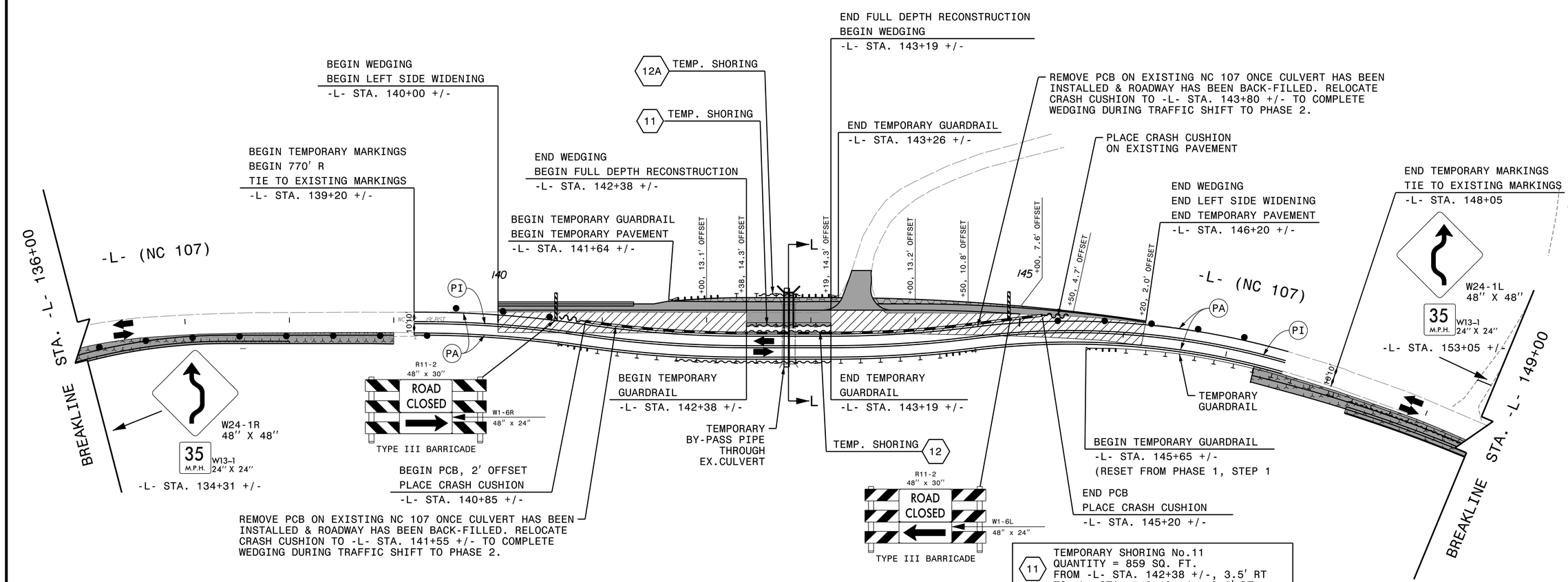

11	TEMPORARY SHORING No.11 QUANTITY = 859 SQ. FT. FROM -L- STA. 142+38 +/-, 3.5' RT TO -L- STA. 143+19 +/-, 3.5' RT
12	TEMPORARY SHORING No.12 QUANTITY = 859 SQ. FT. FROM -L- STA. 142+38 +/-, 9.0' RT TO -L- STA. 143+19 +/-, 9' RT
12A	TEMPORARY SHORING No.12A QUANTITY = 232 SQ. FT. FROM -L- STA. 142+50 +/-, 27.5' LT TO -L- STA. 142+90 +/-, 27.5' LT

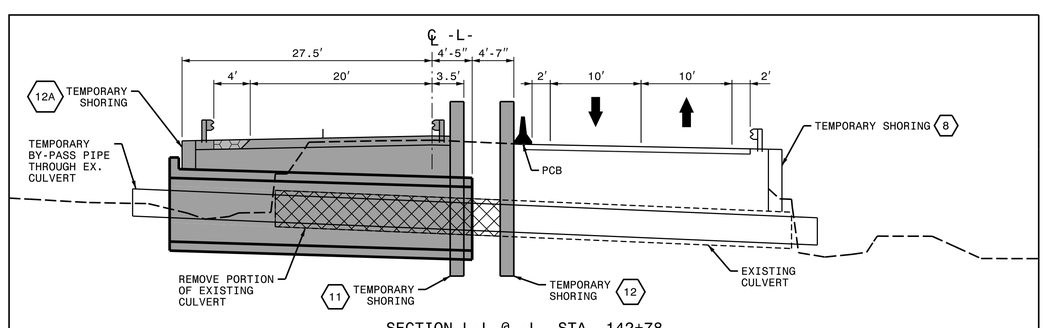

SECTION L-L @ -L- STA. 142+78

APPROVED: Michelle Ward
F83575BB926486...
DATE: 9/2/2016
SEAL

NORTH CAROLINA PROFESSIONAL SEAL 033789 ENGINEER MICHELLE WARD

DIVISION OF HIGHWAYS STATE OF NORTH CAROLINA DEPARTMENT OF TRANSPORTATION WORK ZONE TRAFFIC CONTROL

DOCUMENT NOT CONSIDERED FINAL UNLESS ALL SIGNATURES COMPLETED

PHASE 1, STEPS 2 & 3

PLOT DRIVER: NCDOT_pdf_color_eng_50.plt PENTABLE: NCDOT_tcp.tbl
USER: bscott DATE: 9/2/2016 TIME: 2:02:16 PM
FILE: pw:\\PWAPPTPA01:SouthEast_Tampa\Documents\000166\CON00079759\CON0099518\0000000002589941\6.0_CAD_BIM\6.2_Work_In_Progress\R-4753\Traffic\TrafficControl\TCP\R-4753_TMP_TMP-25.dgn