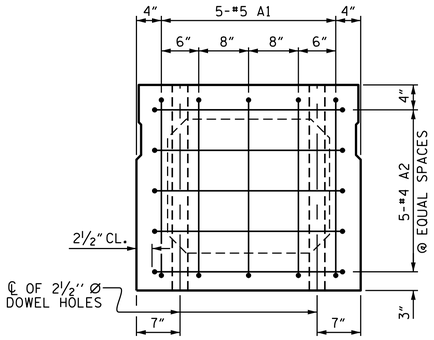

END ELEVATION

SHOWING PLACEMENT OF #5 & #4 "A" BARS AND LOCATION OF DOWEL HOLES. (INTERIOR BOX BEAM SECTION SHOWN-EXTERIOR SECTION SIMILAR EXCEPT SHEAR KEY LOCATION. STRAND LAYOUT NOT SHOWN.)

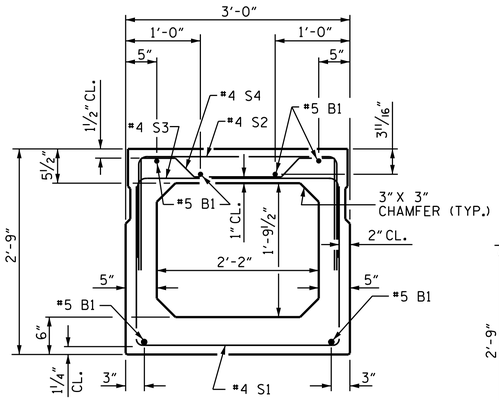

INTERIOR BOX BEAM SECTION

(STRAND LAYOUT NOT SHOWN)

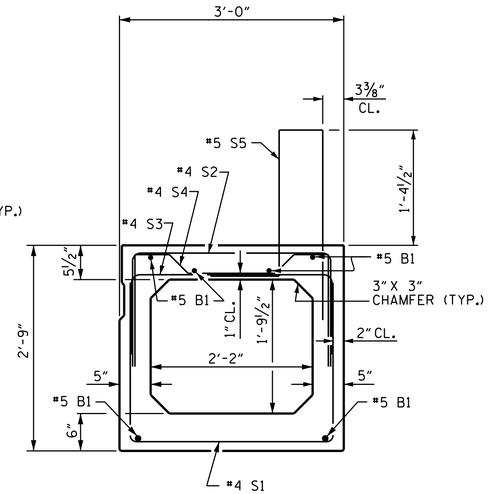

EXTERIOR BOX BEAM SECTION

(STRAND LAYOUT NOT SHOWN)

0.6" Ø LOW RELAXATION STRAND LAYOUT

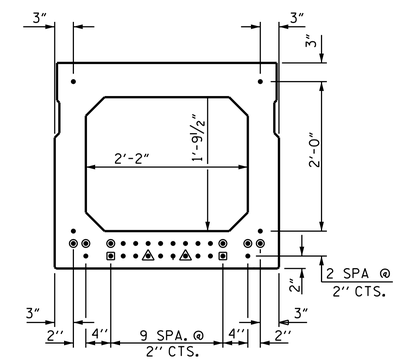

TYPICAL STRAND LOCATION

(24 STRANDS REQUIRED)

DEBONDING LEGEND

- ● FULLY BONDED STRANDS
- ▣ STRANDS DEBONDED FOR 4'-0" FROM END OF GIRDER
- △● STRANDS DEBONDED FOR 10'-0" FROM END OF GIRDER
- ⊙ OPTIONAL FULL LENGTH DEBONDED STRANDS. THESE STRANDS ARE NOT REQUIRED. IF THE FABRICATOR CHOOSES TO INCLUDE THESE STRANDS IN THE BOX BEAM UNIT, THE STRANDS SHALL BE DEBONDED FOR THE FULL LENGTH OF THE UNIT AT NO ADDITIONAL COST.

BOND SHALL BE BROKEN ON STRANDS AS SHOWN FOR THE SPECIFIED LENGTH FROM EACH END OF THE BOX BEAM. SEE STANDARD SPECIFICATIONS ARTICLE 1078-7.

BAR TYPES

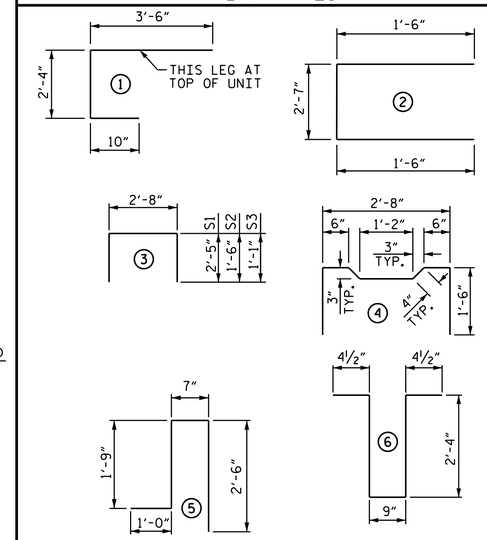

ALL BAR DIMENSIONS ARE OUT TO OUT

BILL OF MATERIAL FOR ONE BOX BEAM SECTION

				EXTERIOR UNIT		INTERIOR UNIT	
BAR	NUMBER	SIZE	TYPE	LENGTH	WEIGHT	LENGTH	WEIGHT
A1	10	#5	1	6'-8"	70	6'-8"	70
A2	34	#4	2	5'-7"	127	5'-7"	127
B1	12	#5	STR	38'-5"	481	38'-5"	481
K1	12	#4	6	6'-2"	49	6'-2"	49
K2	8	#4	STR	2'-7"	14	2'-7"	14
S1	63	#4	3	7'-6"	316	7'-6"	316
S2	63	#4	3	5'-8"	238	5'-8"	238
S3	107	#4	3	4'-10"	345	4'-10"	345
S4	44	#4	4	5'-10"	171	5'-10"	171
✱ S5	105	#5	5	5'-10"	639	--	--
REINFORCING STEEL				1811	LBS.	1811	LBS.
✱ EPOXY COATED REINF. STEEL				639	LBS.		
8000 P.S.I. CONCRETE				13.4	CU. YDS.	13.3	CU. YDS.
0.6" Ø L.R. STRANDS				No. 24		No. 24	

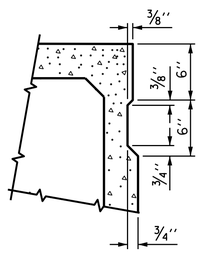

SHEAR KEY DETAIL

NOTE: OMIT SHEAR KEY ON OUTSIDE FACE OF EXTERIOR BOX BEAMS.

GRADE 270 STRANDS	
	0.6" Ø L.R.
AREA (SQUARE INCHES)	0.217
ULTIMATE STRENGTH (LBS. PER STRAND)	58,600
APPLIED PRESTRESS (LBS. PER STRAND)	43,950

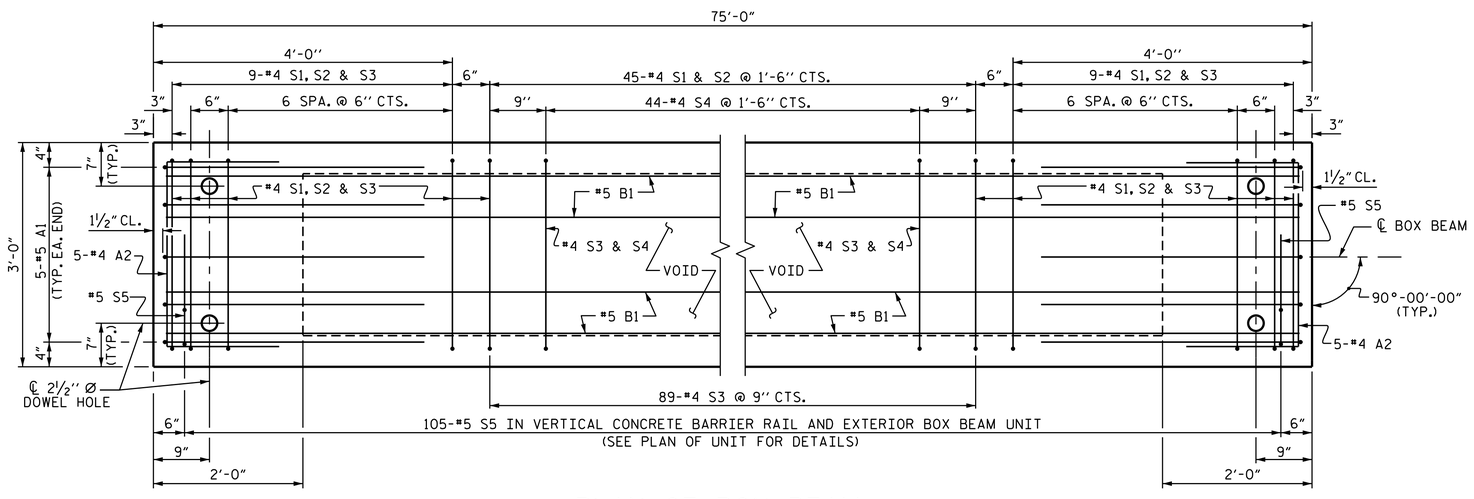

PLAN OF BOX BEAM

EXTERIOR UNIT SHOWN, INTERIOR UNIT SIMILAR EXCEPT OMIT #5 S5 BARS.
FOR LOCATION OF DIAPHRAGMS, SEE "PLAN OF UNIT".
FOR THREADED INSERTS, SEE "THREADED INSERT DETAIL".
FOR REINFORCING STEEL IN DIAPHRAGMS, SEE "DOUBLE DIAPHRAGM DETAILS".

PROJECT NO. B-5546
RANDOLPH COUNTY
STATION: 13+56.00-L-

SHEET 3 OF 5

STATE OF NORTH CAROLINA
DEPARTMENT OF TRANSPORTATION
RALEIGH
STANDARD

3'-0" X 2'-9" PRESTRESSED CONCRETE BOX BEAM UNIT

NORTH CAROLINA PROFESSIONAL SEAL 025516 ENGINEER E. M. MURRAY
CAEB97AEDC5B4E0...
8/22/2016

DOCUMENT NOT CONSIDERED FINAL UNLESS ALL SIGNATURES COMPLETED

REVISIONS						SHEET NO.
NO.	BY:	DATE:	NO.	BY:	DATE:	S-29
1			3			TOTAL SHEETS
2			4			38

ASSEMBLED BY : D.A. DAVENPORT DATE : 10/08/14
CHECKED BY : J.K. BOWLES DATE : 01/14/15
DRAWN BY : DGE 10/11
CHECKED BY : TMG 11/11
REV. 8/14 MAA/TMG

17-AUG-2016 09:57
R:\Structures\Plans\B5546_SD_BX.dgn
jdhawk

STD. NO. 33PCBB4_90S_75L