PROJECT REFERENCE NO.	SHEET NO.
2017CPT.03.06.10101, etc	13

5/14/99

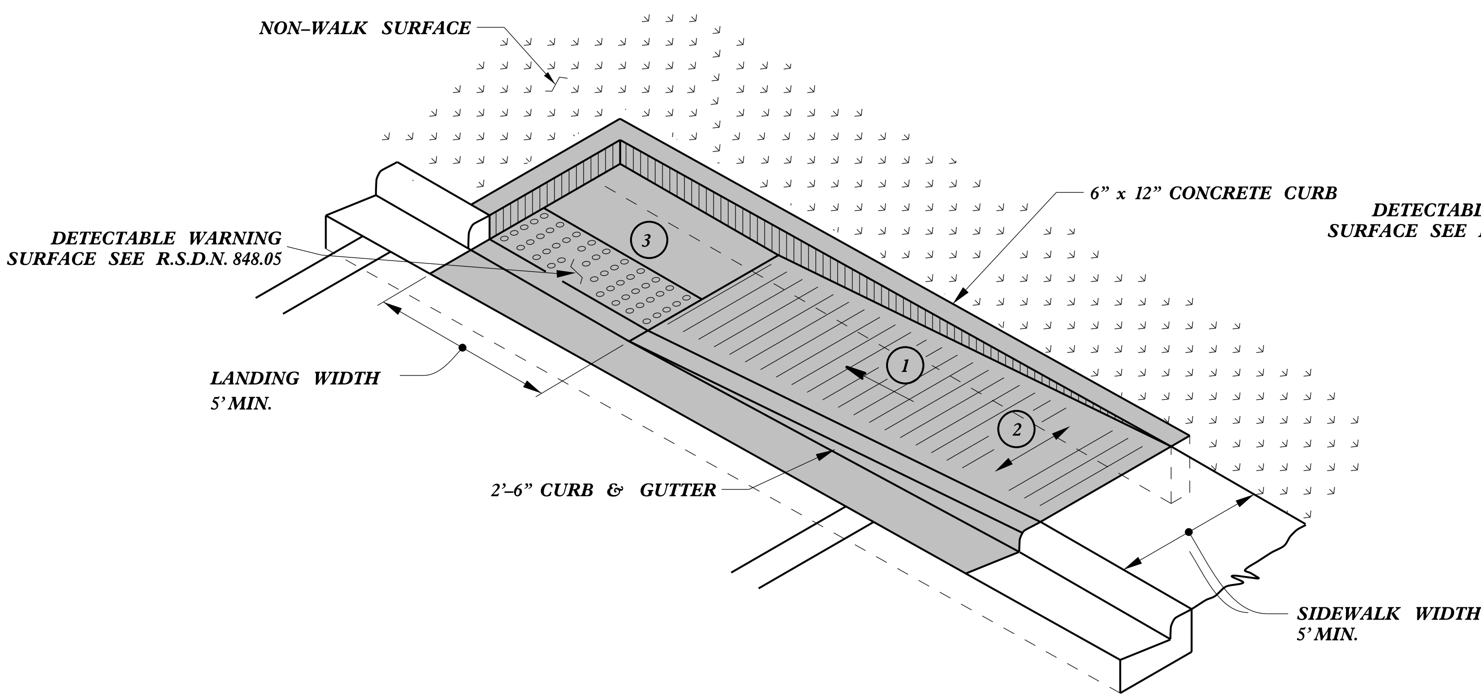

TYPE 1A

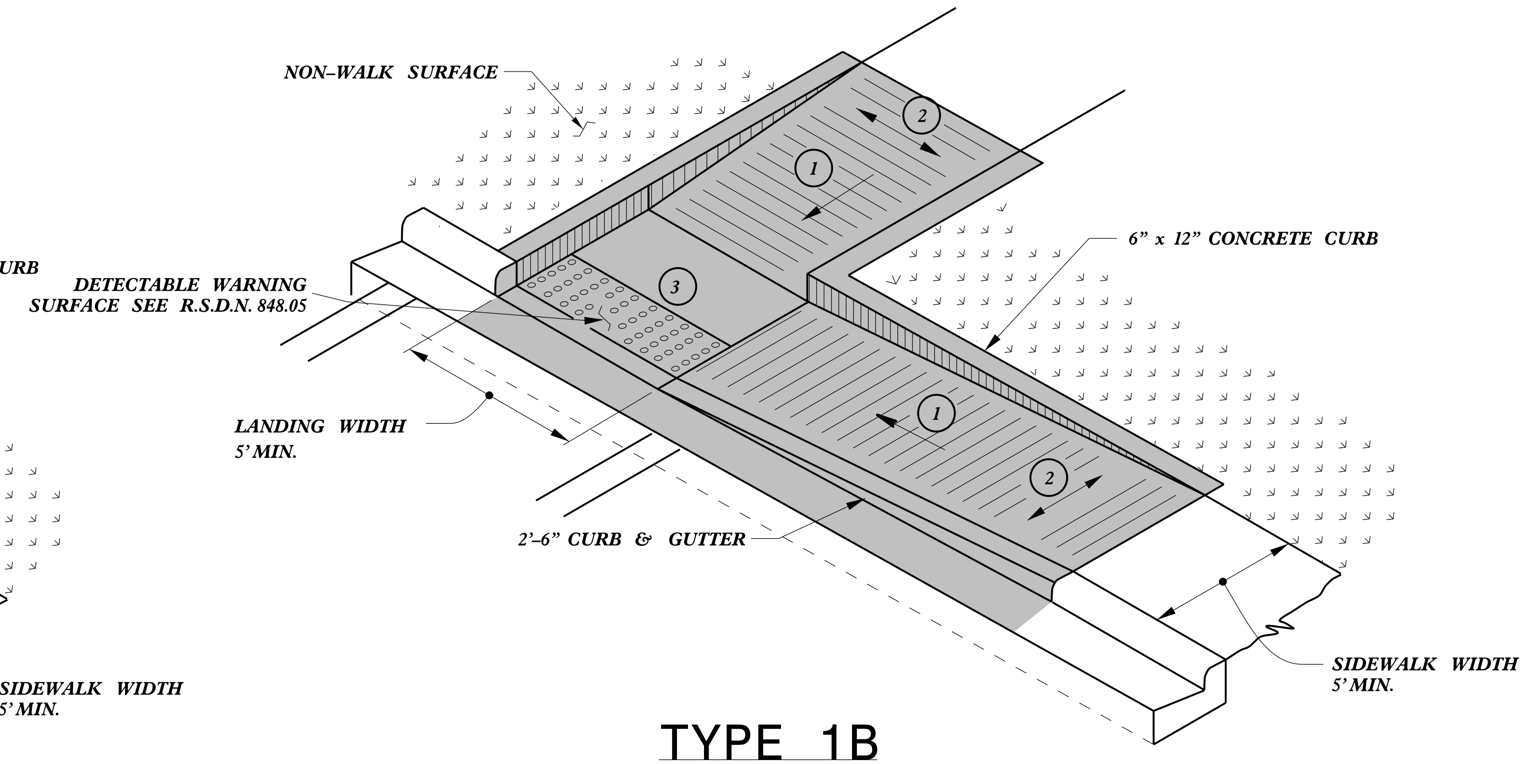

TYPE 1B

PAY LIMITS FOR 1 CURB RAMP

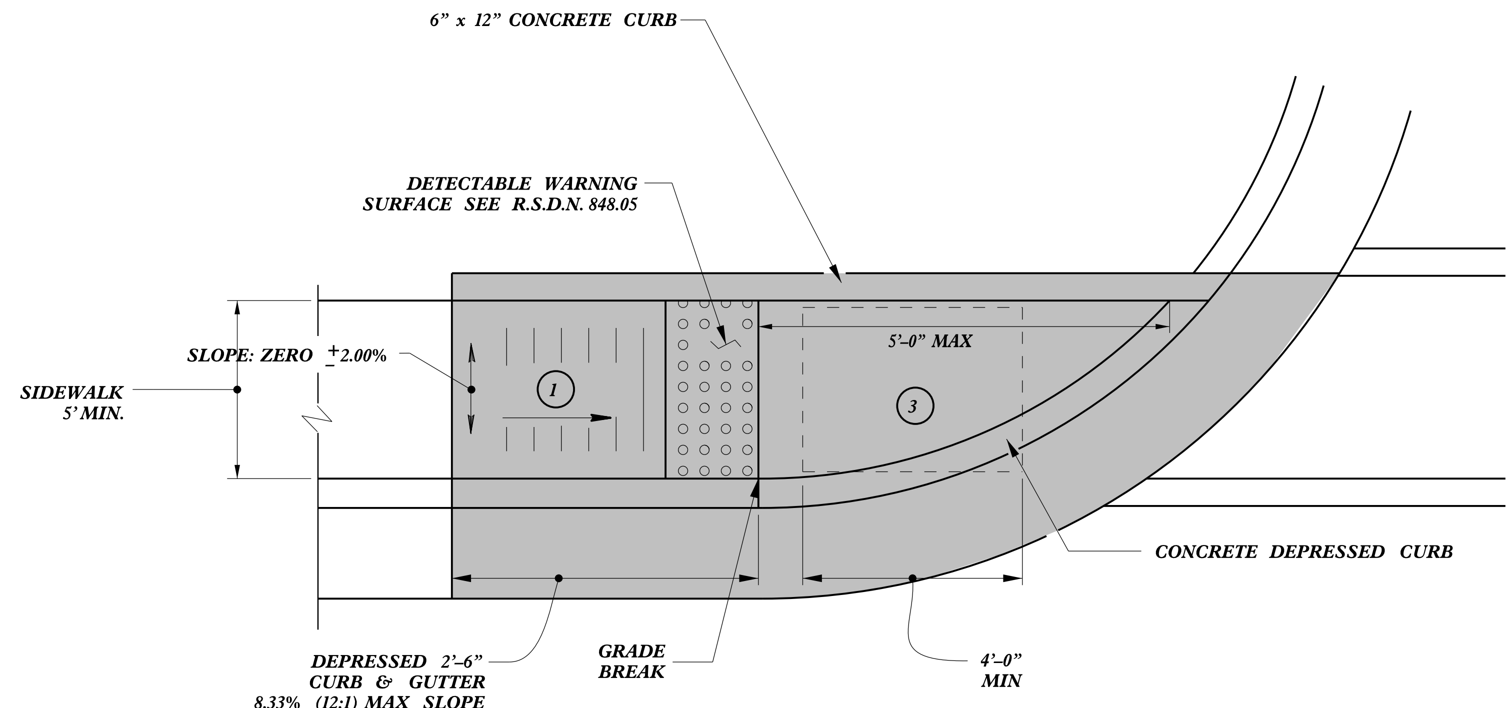

TYPE 1

(1) 8.33% (12:1) MAX RAMP SLOPE

(2) CROSS SLOPE: 2.00%

(3) CURB RAMPS REQUIRE A (4’–0”) MINIMUM LANDING WITH A MAXIMUM CROSS SLOPE AND LONGITUDINAL SLOPE OF 2.00% WHERE PEDESTRIANS PERFORM TURNING MANEUVERS. SLOPE TO DRAIN TO CURB.

REFER TO ROADWAY STANDARD DRAWING NUMBER 848.05 SHEET 3 OF 3 FOR ALL RAMP NOTES

NORTH CAROLINA PROFESSIONAL SEAL 022966 ENGINEER Joel S. Howerton

DocuSigned by: Joel S Howerton
449E8E25522144F...
11/18/2015

DOCUMENT NOT CONSIDERED FINAL UNLESS ALL SIGNATURES COMPLETED

CONTRACT STANDARDS AND DEVELOPMENT UNIT
Office 919-707-6950 FAX 919-250-4119

CURB RAMPS

Directional Ramps

ORIGINAL BY: J.S. HOWERTON DATE: 7/7/11
MODIFIED BY: ______ DATE: ______
CHECKED BY: ______ DATE: ______
FILE SPEC.: stds/2012CurbRamp/CurbRampDetails.dgn

$$$$$$SYSTIME$$$$$
$$$$$$$$$$$$$DGN$$$$$$$$$$$$$$$$
$$$$$USERNAME$$$$