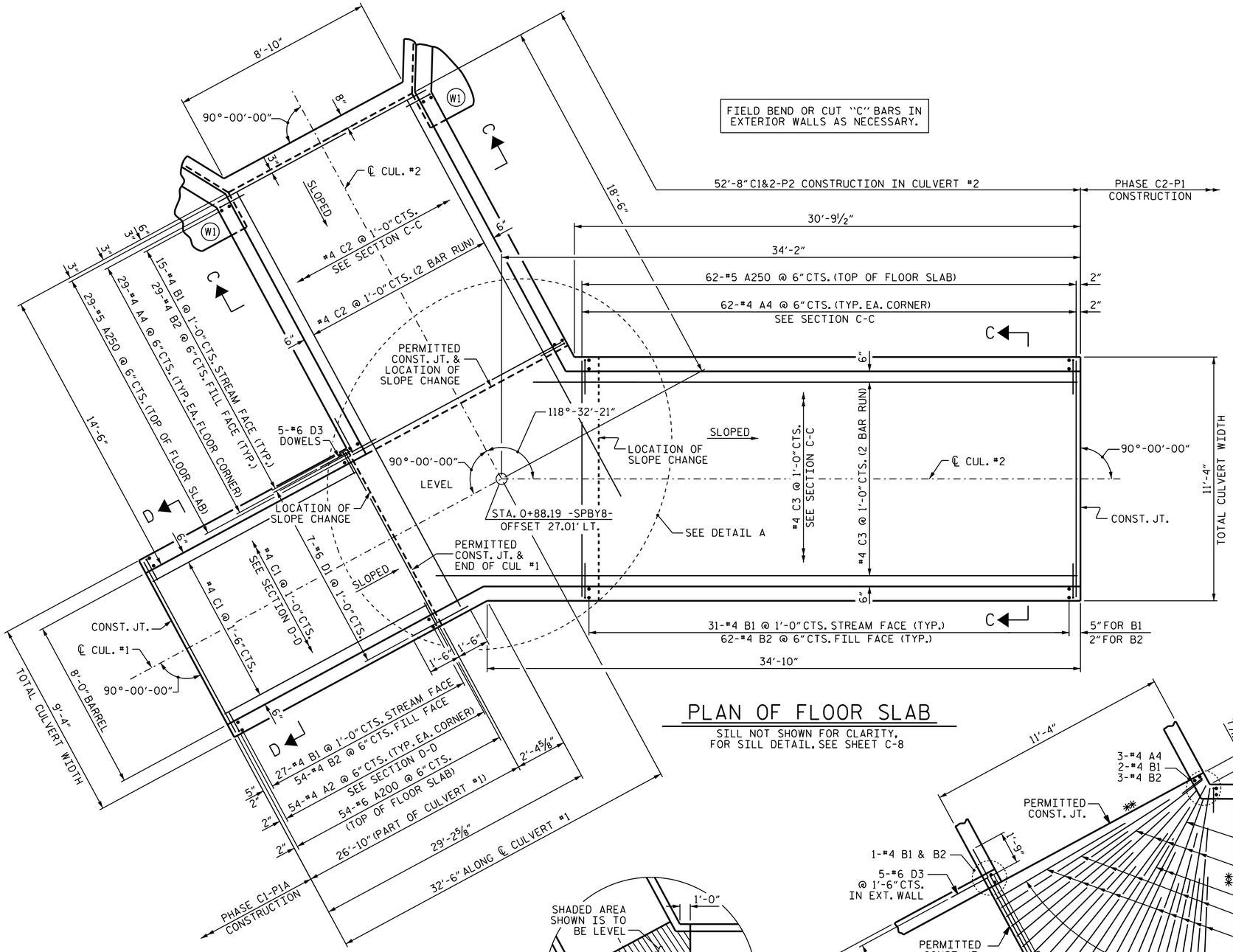


## PLAN OF FLOOR SLAB

SILL NOT SHOWN FOR CLARITY.
FOR SILL DETAIL, SEE SHEET C-8

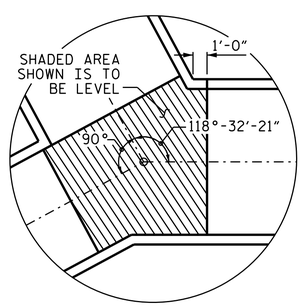


## LEVEL AREA

FOR BOTH FLOOR & ROOF SLABS.

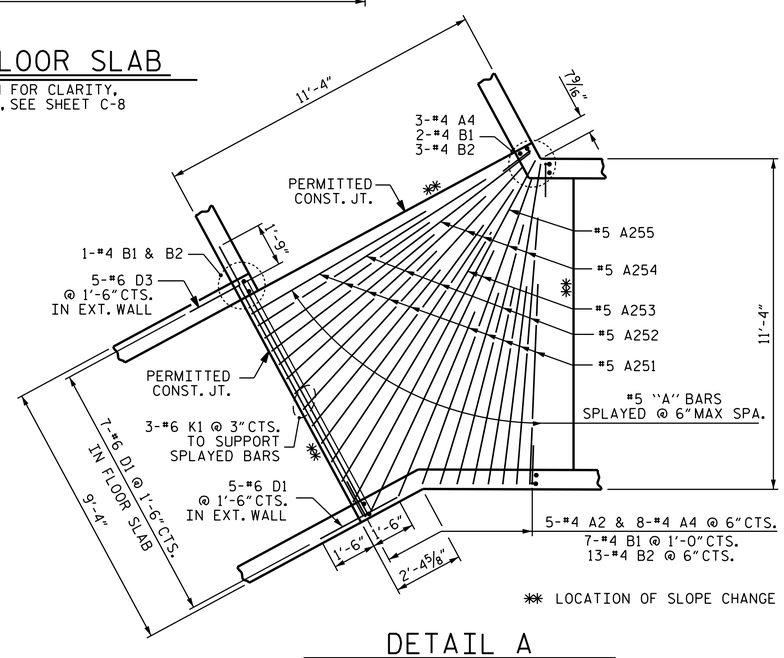


## DETAIL A

#4 "C" BARS NOT SHOWN FOR CLARITY
BED SLOPE IS 0.00% IN THIS DOG-LEG SECTION.

## BAR TYPE

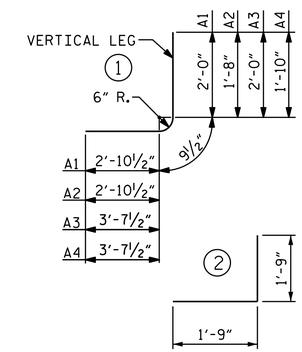


BAR DIMENSIONS ARE OUT TO OUT

## SPLICE LENGTHS CHART

| BAR | SIZE | SPLICE LENGTH |
|---|---|---|
| "C" | #4 | 1'-11" |
| | | |

## BAR SCHEDULE

PHASE II C1&2-P2 CONSTRUCTION

| BAR | NO. | SIZE | TYPE | LENGTH | WEIGHT |
|---|---|---|---|---|---|
| A1 | 113 | #4 | 1 | 5'-8" | 428 |
| A2 | 113 | #4 | 1 | 5'-4" | 403 |
| A3 | 193 | #4 | 1 | 6'-5" | 827 |
| A4 | 193 | #4 | 1 | 6'-3" | 806 |
| | | | | | |
| A100 | 54 | #6 | STR | 9'-0" | 730 |
| A150 | 91 | #6 | STR | 11'-0" | 1504 |
| A151 | 10 | #6 | STR | 7'-1" | 106 |
| A152 | 5 | #6 | STR | 9'-2" | 69 |
| A153 | 2 | #6 | STR | 9'-10" | 30 |
| A154 | 5 | #6 | STR | 11'-1" | 83 |
| A155 | 1 | #6 | STR | 13'-2" | 20 |
| | | | | | |
| A200 | 54 | #6 | STR | 9'-0" | 730 |
| A250 | 91 | #5 | STR | 11'-0" | 1044 |
| A251 | 10 | #5 | STR | 7'-1" | 74 |
| A252 | 5 | #5 | STR | 9'-2" | 48 |
| A253 | 2 | #5 | STR | 9'-10" | 21 |
| A254 | 5 | #5 | STR | 11'-1" | 58 |
| A255 | 1 | #5 | STR | 13'-2" | 14 |
| | | | | | |
| B1 | 156 | #4 | STR | 7'-11" | 825 |
| B2 | 307 | #4 | STR | 6'-4" | 1299 |
| | | | | | |
| C1 | 36 | #4 | STR | 26'-8" | 641 |
| C2 | 80 | #4 | STR | 12'-6" | 668 |
| C3 | 80 | #4 | STR | 20'-0" | 1069 |
| | | | | | |
| D1 | 19 | #6 | STR | 3'-0" | 86 |
| D2 | 2 | #6 | STR | 1'-4" | 4 |
| D3 | 5 | #6 | 2 | 3'-6" | 26 |
| | | | | | |
| G1 | 2 | #4 | STR | 11'-0" | 15 |
| | | | | | |
| K1 | 6 | #6 | STR | 9'-0" | 81 |
| | | | | | |
| REINFORCING STEEL | | | | = | 11,707 LBS. |

PROJECT NO. U-2524D
GUILFORD COUNTY
STATION: 1+26.46 -SPBY8-

SHEET 4 OF 7

STATE OF NORTH CAROLINA
DEPARTMENT OF TRANSPORTATION
RALEIGH

# CULVERTS #1 & #2
# PHASE C1&2-P2

# FLOOR SLAB DETAILS

NORTH CAROLINA PROFESSIONAL SEAL 16301 ENGINEER TING HSIUNG FANG

DocuSigned by: Ting Fang E72088400977435... 7/15/2016

DRAWN BY : A. SORSENGINH DATE : 1/2016
CHECKED BY : T. H. FANG DATE : 5/15/16
DESIGN ENGINEER OF RECORD: A. SORSENGINH DATE : 5/26/16

DOCUMENT NOT CONSIDERED FINAL UNLESS ALL SIGNATURES COMPLETED

| REVISIONS | | | | | | | |
|---|---|---|---|---|---|---|---|
| NO. | BY: | DATE: | NO. | BY: | DATE: | | |
| 1 | | | 3 | | | | |
| 2 | | | 4 | | | | |

SHEET NO. C-10
TOTAL SHEETS 34

CUL #2

15-JUL-2016 10:07
K:\TIPProjects-U\U2524D\Structures\Plans\culvert\u2524d_sd_cul2.dgn
ttfang