DocuSign Envelope ID: F17910F4-1872-4F36-82CA-51E95744D367

5/14/99

PROJECT REFERENCE NO.	SHEET NO.
U-2524D	2C-7

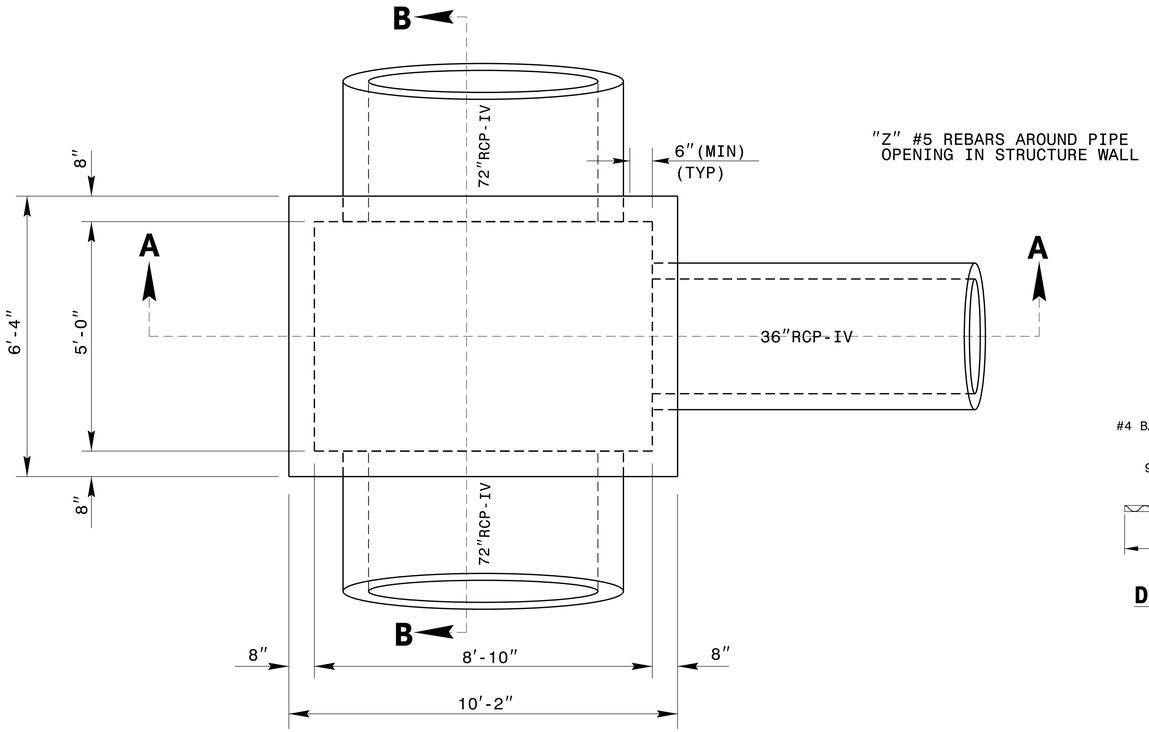

PLAN VIEW

GENERAL NOTES:

USE CLASS "B" CONCRETE THROUGHOUT.

OPTIONAL CONSTRUCTION - MONOLITHIC POUR, 2" KEYWAY, OR #4 BAR DOWELS AT 12" CENTERS OR BRICK/BLOCK WALLS AS DIRECTED BY THE ENGINEER.

USE FORMS FOR THE CONSTRUCTION OF THE BOTTOM SLAB.

BOX DIMENSIONS MAY BE FIELD ADJUSTED AS DIRECTED BY THE ENGINEER.

2" MINIMUM CONCRETE COVERAGE ON ALL REBAR.

BILL OF MATERIALS

BAR	NO.	SIZE	LENGTH	WEIGHT
H	42	#5	8'-10"	387
H1	48	#5	8'-6"	426
V	54	#5	7'-6"	423
Z	14	#5	5'-0"	74
TOTAL REINF. STEEL (LBS.)				1310
TOTAL CONC. (CU. YDS.)				* 11.8

* NO DEDUCTION HAS BEEN MADE FOR PIPES
* 0.3 CU. YD. DEDUCTION FOR 1-36" RCP-IV
* 2.00 CU. YD. DEDUCTION FOR 2-72" RCP-IV

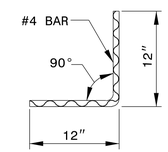

DOWEL

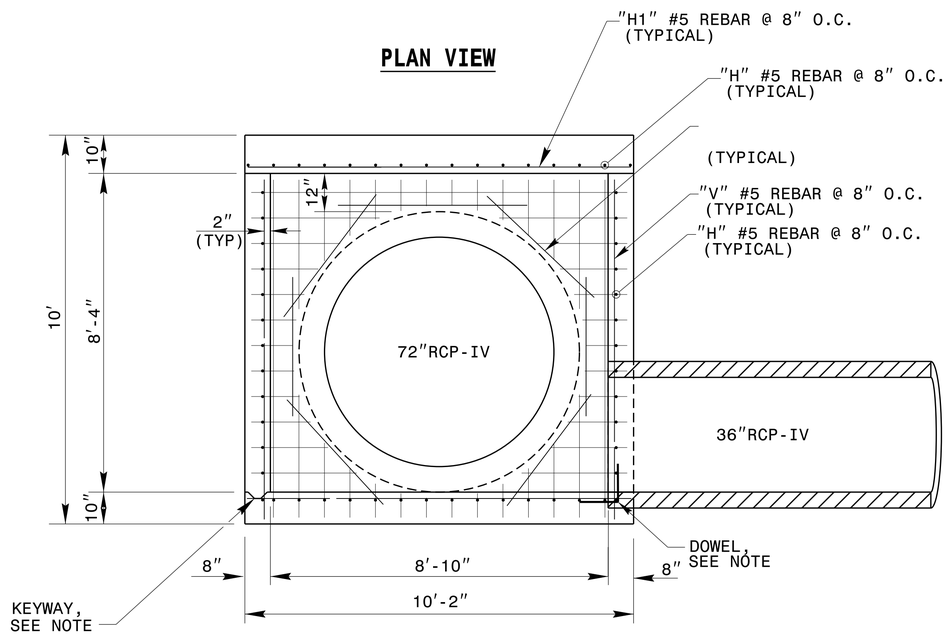

SECTION A-A

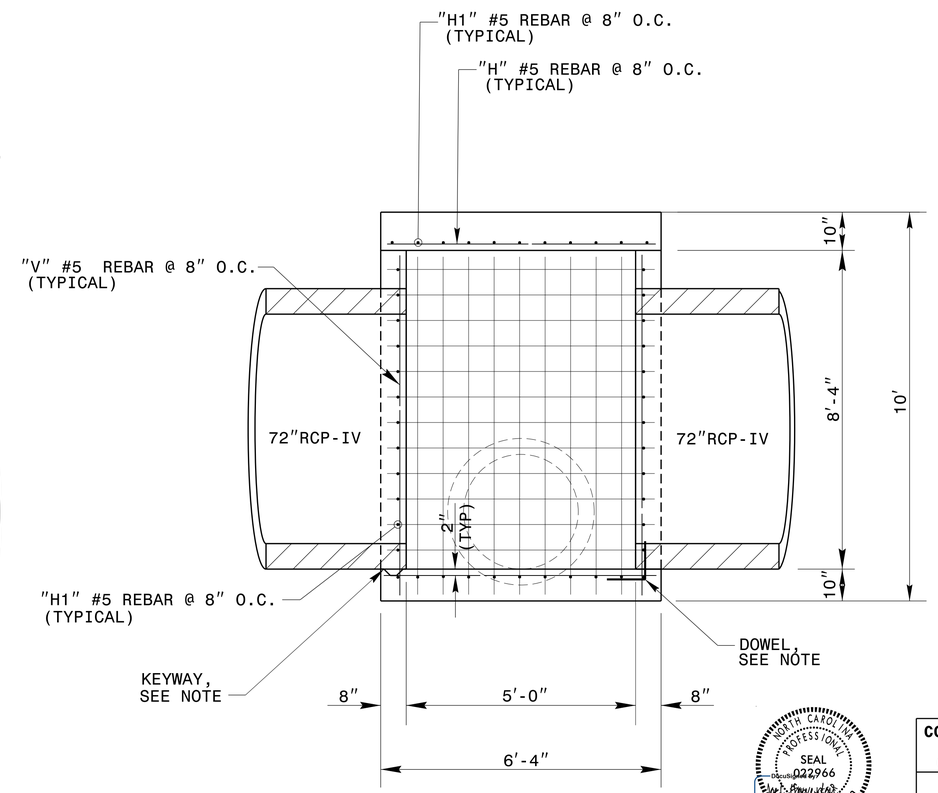

SECTION B-B

NORTH CAROLINA PROFESSIONAL SEAL 022966 ENGINEER Robert S. Howerton

6/2/2016

DOCUMENT NOT CONSIDERED FINAL UNLESS ALL SIGNATURES COMPLETED

STRUCTURE No.10A3

CONTRACT STANDARDS & DEVELOPMENT UNIT
STANDARDS AND SPECIAL DESIGN
Office 919-707-6950 FAX 919-250-4119

SPECIAL 72" JUNCTION BOX WITH SLAB LID

ORIGINAL BY: DATE:
MODIFIED BY: nbritt DATE: 05/11/2016
CHECKED BY: DATE:
FILE SPEC.: detail/nbritt/english/urban/u2524d_72jb.dgn

SYSTIME$$$$
DGN$$$$
USERNAME$$$$